Operation and Service Instructions

DirectFlo™ DF1400

Issue Date: January 2009

This manual covers all variations of the DF1400 series
(DF1400-1, DF1400-2, ETC)

Comco Inc.
2151 N. Lincoln Street
Burbank, California 91504
USA

Phone: 818-841-5500

www.comcoinc.com

Book P/N PF1430
File: DF1400.doc

COMCO

Table of Contents

Table of Contents

Welcome!

Welcome to the User's Manual for the Comco DirectFlo™ model DF1400 Micro-abrasive Blaster! You have purchased the finest micro-abrasive blaster available today, and this manual is designed to help you set up, operate, and maintain the DirectFlo™ DF1400.

NOTE: Prior to setting up and operating your DirectFlo, the operator and the department supervisor should carefully review this entire manual.

The Comco Warranty

Comco warrants that the DirectFlo™ DF1400 will be free from all defects in material and workmanship under normal use for a period of one year from the date of purchase or 2,000 hours of normal operation, whichever comes first.

The warranty period begins when the equipment ships from the Comco facility and applies to the original owner only. Comco is not liable for damages from any cause or use of such equipment beyond the cost of repairing any defective parts.

If the equipment fails to perform satisfactorily during the warranty period, Comco has the option to do any one of the following: 1) Send replacement parts to the customer to be installed by the customer; 2) Repair the unit at the customer's facility; or 3) Request that the unit be returned to the Comco factory. Comco shall furnish any replacement parts without cost, F.O.B. the Comco factory in Burbank, California, provided that Comco is notified of the defect within the warranty period. Any defective parts shall be returned to Comco for inspection and analysis.

Exclusions

The above warranty does not apply to defects or problems resulting from improper or inadequate maintenance by the customer; unauthorized modification or misuse; failure to follow the operating instructions; the use of any supplies or parts, including but not limited to nozzles, powders, and attachments, not manufactured or supplied by Comco.

The warranty also does not cover problems resulting from improper or inadequate facilities (contaminated air, improper power) or items that should be expected to wear in normal operation, such as nozzles, abrasives, tubing, or fittings.

This is Comco's only warranty and is in lieu of all other warranties of merchantability and fitness for any particular purpose. No representations or warranties are authorized except as herein stated.

Safety Precautions

General Safety Considerations

The DirectFlo has been designed to be safe to operate when used properly. Any device that is pressurized and requires electrical power, however, requires that certain safety precautions be observed to avoid potentially hazardous situations. The primary safety-related issues involved in the use of the DirectFlo are listed below and addressed in detail on the following pages.

1. Working with a device that is pressurized.
2. Working with an electrical device.
3. Working with a device that uses abrasive powders that could be potentially dangerous if inhaled or ingested in large quantities or put in constant contact with the skin.
4. General issues involved in operating machinery.

Working with a Device that is Pressurized

The DirectFlo uses pressurized air to perform its basic function. While Comco's blasting machines incorporate relief valves and check valves to minimize the risk of an accident related to air pressure, Comco also recommends the following:

- √ The air supply system should have a shutoff valve located upstream of the blasting machine so that the supply pressure can be turned off independently of the blaster.
- √ Pressure relief valves should be incorporated into the supply system to minimize the risk from system over pressure.
- √ Anyone who will use the DF1400 should be trained in its basic operation.
- √ The DirectFlo should always be turned OFF and vented prior to performing any maintenance.
- √ When replacing parts during maintenance, use only Comco parts and verify that all installations are correct before using the DirectFlo.

Improper set-up or use of the DirectFlo DF1400 may result in a condition that could be hazardous. All fittings and covers must be properly installed and tightened in order to minimize any hazard.

Working with an Electrical Device

The electrical hazards associated with the DirectFlo are minimal, since all primary electrical components are inside the primary housing. However, the operator should take precautions that apply to any electrical device that has a power cord that plugs into an electrical outlet. These precautions include:

- √ Verify the proper operating voltage on the DirectFlo by checking the voltage select switch located on the back of the unit.
- √ Before plugging the power cord into an electrical outlet, examine it for evidence of damage such as cracked, worn, or torn insulation; exposure of bare wires; or bent tines on the plug.
- √ Ensure that the machine is never operated near water or while it is wet.
- √ Always verify that the power switch is in the OFF position when the machine is not in use for long periods of time.

When working inside the DirectFlo housing, there is the possibility of electrical shock. To minimize this hazard, Comco recommends the following:

- √ Unplug the unit from facility power any time the machine's cover will be removed.
- √ Do not operate the DirectFlo with its cover removed.
- √ Keep the interior of the DirectFlo clean of dust, powder, and any foreign object or substance that could conduct electricity.

CAUTION:	Some abrasive powders are conductive and may present a hazard if allowed to accumulate inside the machine.

Working with the Abrasive Media

The DirectFlo uses several types of abrasive media that should not be inhaled or ingested in large quantities or maintained in prolonged contact with the skin. When working with the abrasive media, Comco recommends the following:

- √ Do not direct the abrasive blast on bare skin or face/eyes.
- √ A WorkStation and dust collector **must** be used in conjunction with the DirectFlo. If you must blast outside a WorkStation, a full facemask and oxygen supplied respirator and hand protection are required per NIOSH (National Institute for Occupational Safety and Health).
- √ Handling operations such as repackaging or refilling of the abrasive media should only be performed in well-ventilated areas and with proper care to minimize dust in the eyes or breathing passages. Always use a dust respirator for dust protection when exposed to dust clouds. The 3M respirator #8710 is NIOSH/MSHA approved for these types of abrasive handling operations

Working with the Abrasive Media (cont'd)

- √ Certain abrasive media, such as glass beads, can present a slipping hazard if they are spilled on the ground. Always clean up spilled abrasive, and place appropriate warning signs in areas where the abrasive will be on the ground (such as during long-term operation).
- √ Abrasive powders, particularly glass beads and plastic, may generate static charges. To minimize the risk of electrostatic discharge, ground the DirectFlo and the WorkStation. In some instances the operator may also wish to use grounding straps (Wrist-Stats™ or equivalent).
- √ Flammable powders, such as walnut shell and plastic, may pose a fire or explosion hazard. Always use a vigorous dust extraction device to prevent hanging dust clouds.
- √ After using the DirectFlo, or after handling any of the abrasive media, wash your hands before touching or rubbing your eyes.
- √ Gloves may be necessary for operators who are sensitive to powders or dust on their skin.
- √ Some powders, if allowed to collect inside the machine, may cause electrical shorts.

Material safety data sheets (MSDS's) for all abrasives distributed by Comco are available from the Comco factory. Every powder shipment includes an MSDS. Contact the Comco Customer Service department to obtain extra copies of any MSDS.

Avoiding Hazards Associated with Operating Machinery

- √ Place the DirectFlo securely on a solid workbench or counter so that the unit cannot tilt or fall over.
- √ Always secure the nozzle-end of the abrasive blast hose before pressurizing a blasting unit. An unsecured hose may whip around and cause injury or damage.
- √ Keep fingers out of the hose pinch.
- √ When working inside the cabinet, avoid possible sharp edges and remember that solenoids on valves can become hot.
- √ Set up the DirectFlo and WorkStation so that it is ergonomically correct to allow safe and comfortable use by all operators.
- √ Route the foot pedal cord from behind the bench to prevent it from becoming a possible trip hazard.

Avoiding Hazards Associated with Operating Machinery (cont'd)

The following warning labels/pictograms are utilized in the DirectFlo CE (European) versions:

Symbol	Meaning
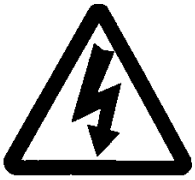	**ELECTRICAL HAZARD**
	**HAND PROTECTION RECOMMENDED WHERE APPROPRIATE**
	**EYE PROTECTION RECOMMENDED WHERE APPROPRIATE**
	**RESPIRATORY PROTECTION RECOMMENDED WHERE APPROPRIATE**

Chapter 1: The DirectFlo DF1400

In This Chapter

- A general description of the DirectFlo
- How the DirectFlo works
- Detail specifications

Overview

The Comco DirectFlo Model DF1400 is a bench-top machine that delivers a precisely controlled stream of micro-abrasive particles at high velocity. With the appropriate abrasive powder and the necessary adjustments, it will clean, deburr, cut or drill any material, particularly hard or brittle ones. Since dry air is used as a propellant, it is a relatively clean process.

The machine is essentially simple and uncluttered (see Figure 1-1). It consists principally of an inlet air valve (rear panel), air pressure regulator with gage, modulator (internal), abrasive powder tank, and mixing chamber. The abrasive PowderGate® valve assembly to stop and start the abrasive flow, the footswitch to actuate it, and a handpiece that holds the precision nozzle, complete the machine. All the component parts are manufactured to the highest standards and are designed for maximum life consistent with reasonable cost. The basic mechanisms employed, particularly the modulator, are covered by the following patents:

United States:	3,053,016	Johnson
	3,084,484	Hall
	3,638,839	Weightman
United Kingdom:	1,243,294	

Additional United States and foreign applications for patents are pending.

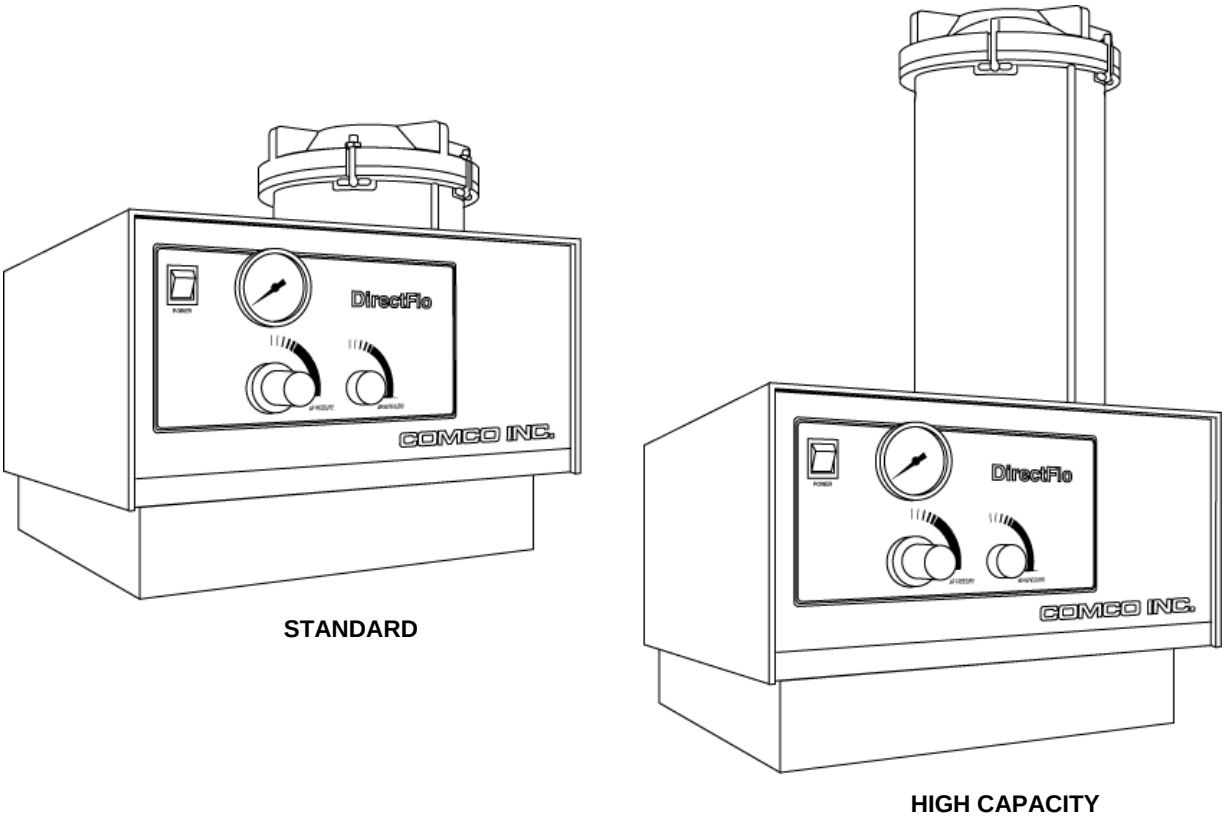

Figure 1-1: The Comco DirectFlo DF1400

How the DirectFlo Works

As shown in Figure 1-2, below, when the DirectFlo Power Switch on the front panel is initially turned “ON”, supply air enters through the energized air valve at the back of the unit. The supply air passes through a regulator that allows the operator to control the system pressure, as indicated by the gage on the front of the machine.

The regulated air then passes through an open, or de-energized, modulator assembly and into the mixing chamber and abrasive tank. Air cannot escape through the nozzle because the PowderGate (or shut-off) assembly is closed. The air pressure inside the system builds up until it reaches the regulated pressure.

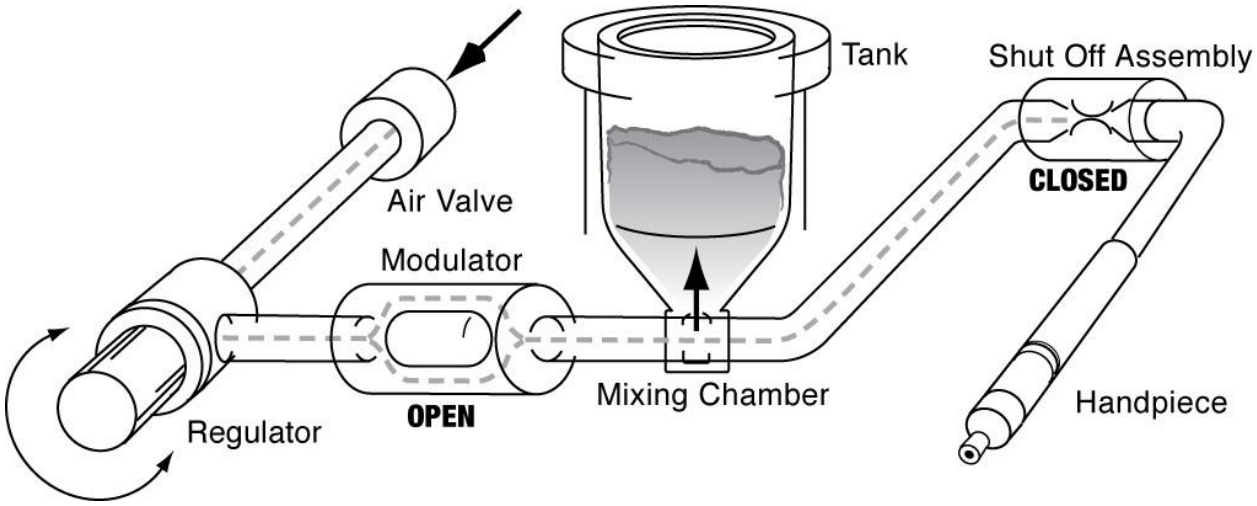

Figure 1-2: DirectFlo, Pressurized

The DirectFlo, as shown in the illustration above, is now pressurized and ready to use. To operate the DirectFlo from this point would simply require picking up the nozzle, pointing it at the item to be blasted, and depressing the footswitch to begin blasting. What happens when the machine is actually in operation is explained on the following pages.

How the DirectFlo DF1400 Works (cont'd)

Stepping on the footswitch used to operate the DirectFlo causes two things to happen:

1) The PowderGate assembly opens, which allows air to flow from the nozzle. Refer to Figure 1-3, item 1.

2) An electrical signal is sent to the coil of the modulator assembly which energizes and de-energizes it 60 times every second. Refer to Figure 1-4, item 2.

At the beginning of the operating cycle (as shown in Figure 1-3, below), the hose pinch is opened. Before the modulator has had a chance to energize, regulated air flows freely through the open modulator valve, the mixing chamber, and out the nozzle.

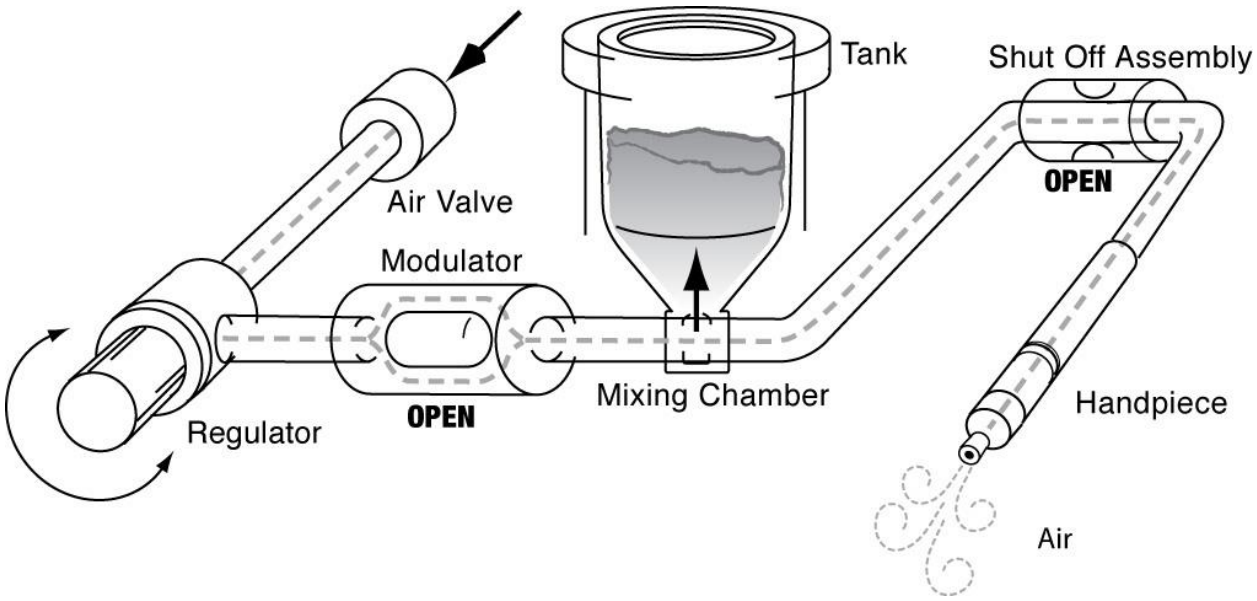

Figure 1-3: Modulator Open

Since the air flowing from the regulator into the mixing chamber is at basically the same pressure as that in the tank, the upward force of the air keeps the abrasive in the tank. At this point, little or no abrasive is being injected into the air stream.

How the DirectFlo DF1400 Works (cont'd)

In the second half of the operating cycle, the modulator coil becomes energized. This pulls the modulator core against the seat (see Figure 1-4, below), shutting off the airflow from the regulator. The pressure in the mixing chamber now decreases because the downstream end of the system, at the nozzle, is open to the atmosphere.

Since the pressure in the mixing chamber is lower than the pressure in the abrasive tank, the two pressures try to balance. Air pressure inside the abrasive tank pushes a small amount of abrasive through a precision orifice at the bottom of the tank, into the mixing chamber and out through the nozzle.

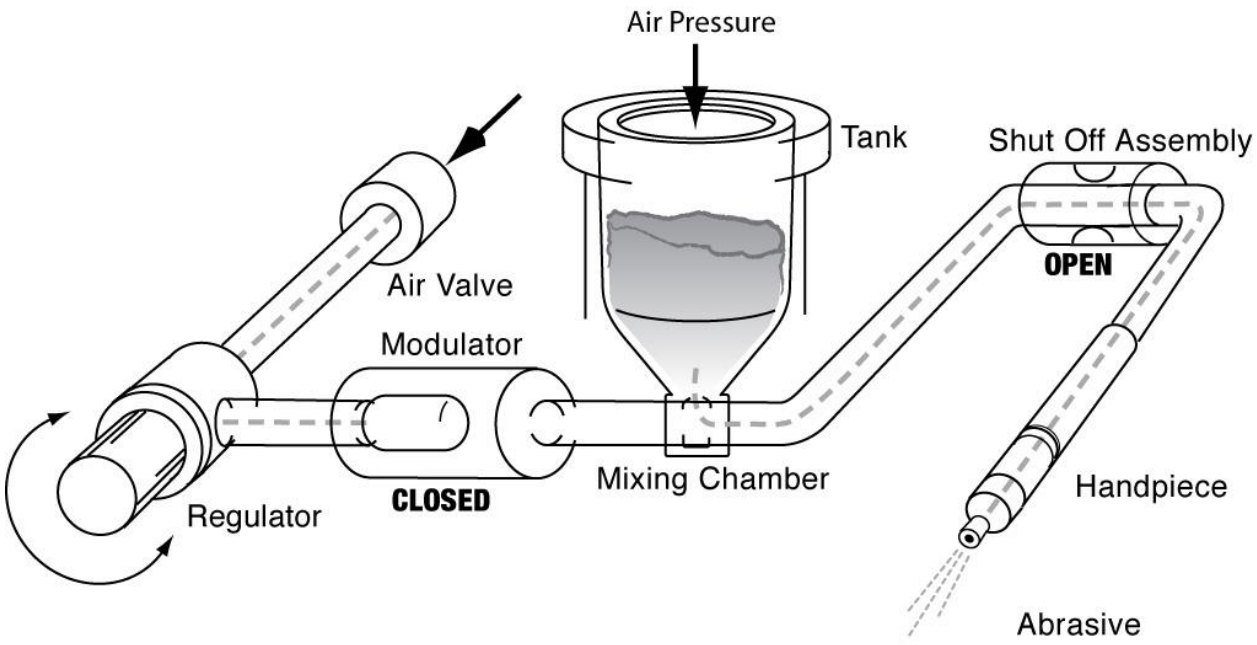

Figure 1-4: Modulator Closed

When the next cycle begins, the modulator is again de-energized, and opens to allow pressurized air to freely flow into the mixing chamber and out the nozzle. This forces air back into the abrasive tank, stabilizing the pressure between the tank and the mixing chamber (refer back to Figure 1-3).

Each cycle happens very quickly; 50-60 times per second. The end result of this "stop/start" action of the modulator is a consistent stream of abrasive out the nozzle, as long as the footswitch is depressed. Releasing the footswitch stops the modulator from cycling and causes the PowderGate to close the outlet air hose.

The only way for the abrasive powder in the tank to reach the mixing chamber is via the orifice at the bottom of the tank. By changing the size of the tank orifice, you can change the amount of abrasive that enters the mixing chamber, and thus change the abrasion or cutting rate at the nozzle. Additional information regarding the tank orifice, nozzle sizes, abrasives, and other variables in the abrasive blast process is presented in Chapter 3 of this manual.

Detail Specifications

Abrasive (see Chapter 3)

Type	Selected powder, smooth to sharp, soft to hard
Size	20 to 300 Microns

Nozzles (see Chapter 3)

Material	Highest quality Tungsten Carbide
Sizes, Round	0.030 to 0.080 in. Dia. (0.8 to 2 mm)
Sizes, Rect.	0.008 x 0.125 to 0.016 x 0.190 in. (0.2 x 3.2 to 0.4 x 4.8 mm)
Configuration	Straight or Right Angle (Multiple, Optional)

Air

Type	Nitrogen, CO_2, or Dry Compressed Air
Supply Pressure	90 to 140 PSIG (6.2 to 9.6 Bars)
Working Volume, Max	6 SCFM (170 SLM) Typical [1]
Working Pressure	40 to 140 PSIG (2.7 to 9.6 Bars)
Moisture	200 PPM Max
Oil	10 PPM Max
Particles	5 Microns Max

Electrical

Voltage[2]	115 or 230 (+10, -20) VAC
Frequency	50/60 Hz
Power	Less than 100 Watts

Physical

Width	18 in. (46 cm)
Depth	16 in. (40 cm)
Height [Tall tank model]	17 in. (43 cm) [25.2 in. (64 cm)]
Weight [Tall tank model]	64 lbs. (29.5 kg) [72 lbs. (32.6 kg)]
Tank Size [Tall tank model]	200 in^3 (3300 cm^3) [400 in^3 (6600 cm^3)]
Tank Capacity, abrasive	10 lbs. (4.5 kg) [20 lbs. (9 kg)]

During normal operation, employing a 0.060" diameter nozzle, a 0.025" diameter tank orifice, and 25 micron aluminum oxide powder; a full tank of powder, approximately 10 lbs. (standard tank), will last about 6 - 9 hours of actual blast time; air will be used at about 250 standard cubic feet per hour (SCFH) at 80 psig; and nozzle life will be 8 to 35 hours depending on the amount of wear that can be tolerated.

[1] Units supplying abrasive to multiple nozzles may require up to 12 SCFM.
[2] Operating voltage specified by order and is shown on nameplate.

Chapter 2: Getting Started

In This Chapter

- The work area required to properly use the DirectFlo
- What you received with the DirectFlo
- Basic components of the DirectFlo
- Setting up and testing the DirectFlo

The Proper Work Area

The DirectFlo should be used in an environment that:

- Provides adequate ventilation.
- Provides adequate lighting both inside and outside the primary WorkStation. Comco recommends that the general environment be illuminated with at least 50 decaluxes and that the interior of the WorkStation be illuminated with a minimum of 125 decaluxes.
- Is between 68°F and 85°F, with less than 40 percent relative humidity.

The DirectFlo is intended for use in a factory or shop environment. It is **not** designed for use where it could be exposed to rain, caustic chemicals, heavy vibration, and other non-standard environments. Use in applications other than those described in this manual may result in hazardous conditions and void the warranty.

Since it is impossible to achieve 100% containment of the abrasive within the system, it is not recommended for use in a “clean room”.

In addition to the DirectFlo, typically three additional elements are needed for proper micro-abrasive blasting: a WorkStation, a dust collector, and a dry air supply. The following paragraphs explain the importance of each of these items. Refer to figure 2-1 to see how these items work together as a complete system.

WorkStation

A suitable hood or box providing a means of working with the abrasive material without contaminating the atmosphere of the room is required. It must protect the operator's face and provide adequate light. The Comco WS2200 and WS6000 WorkStations are designed for this purpose.

Dust Collector

In order to remove the spent abrasive, a suitable industrial dust collector is required. These dust collectors have both high airflow and large filter areas to keep work areas clean and dust free. The Comco DC2100 is a suitable dust collector for most micro-abrasive blasting applications. In heavy usage, multiple blaster, and automated applications, the continuous duty DC3000 dust collector is recommended.

Air Supply

The propellant required for the abrasive is compressed air or neutral gas that meets the Detail Specifications outlined in Chapter 1. Comco has a complete line of air dryers for shop (compressed) air supplies that will meet or exceed those specifications.

Bottled gas such as CO_2 or nitrogen provides clean, dry air, and may be used if shop air is not available. However, depending on operating conditions, a 50 lb. bottle of gas will only last 3-4 hours. Bottled gas does not require air dryers, but may require special regulators. Contact Comco for more information.

Figure 2-1: Micro-abrasive Blasting System Requirements

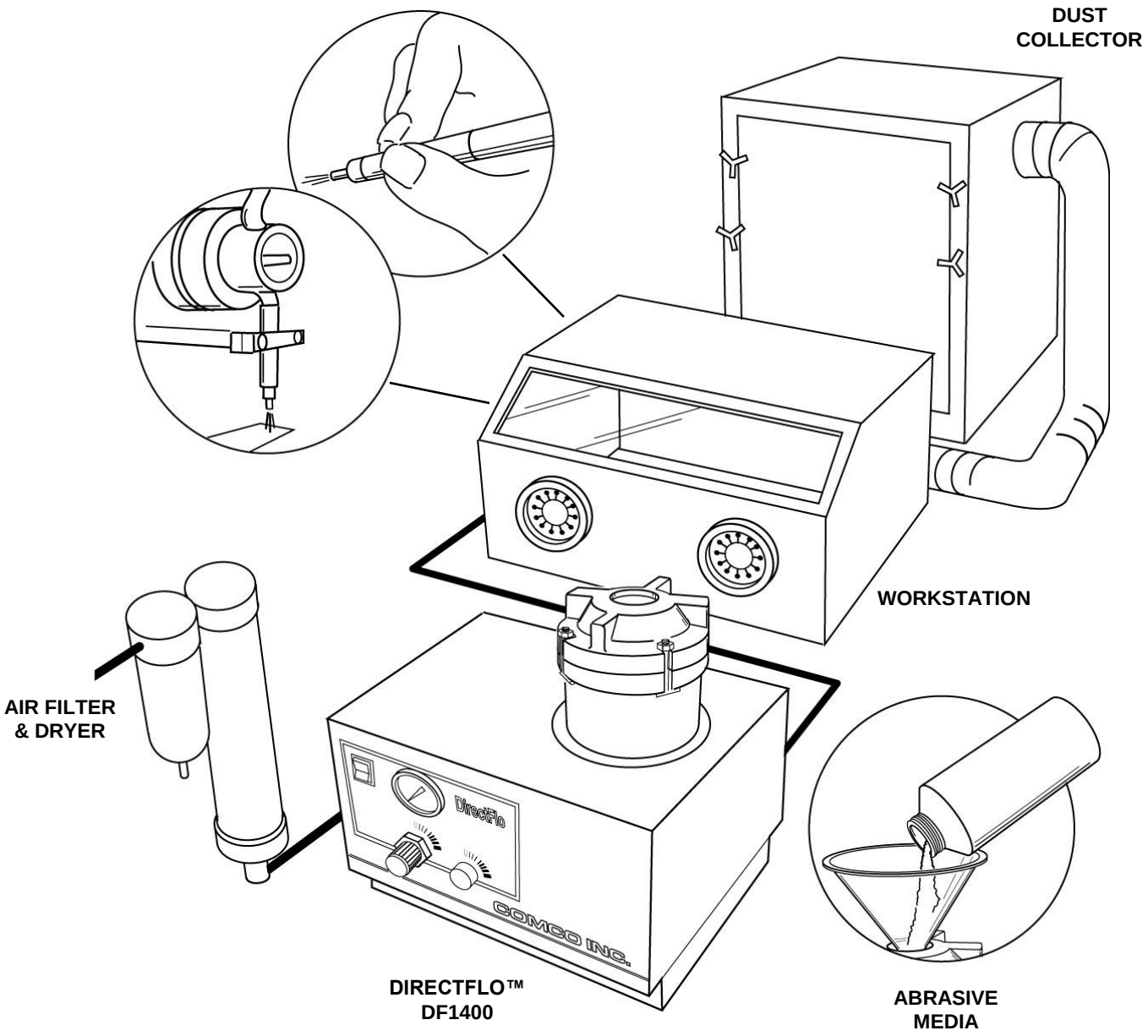

Electric Power

A source of 115 or 230 VAC, 50/60 Hz, capable of providing 100 watts is required for the DF1400. If the WS2200 or WS6000 WorkStation is used, it requires 40 watts. The DC2100 Dust Collector, if used, requires about 16 amps (115 VAC) for its 1-HP motor. Actual voltage required for each machine will be found on the nameplate.

QUICK START INSTRUCTIONS

You may use this tip sheet to quickly get your DirectFlo set up and ready to operate, and as a ready reference for common questions regarding the operation of the DirectFlo. Keep it nearby and refer to it often. For complete details on the DirectFlo, Comco strongly urges you to read the manual completely.
The money invested in this equipment justifies this time.

SAFETY PRECAUTIONS

1 The DirectFlo operates using high voltage electrical power and high pressure air. Proper set-up, operation, and maintenance is essential for safe use. Read the Safety Precautions in the introduction of the manual before using your DirectFlo.

2 You must use proper dust collection and a WorkStation in conjunction with the equipment.

3 Never point the nozzle at exposed skin, eyes, or face.

4 Always be sure that the nozzle is held firmly before activating the foot pedal.

5 Add abrasive to the tank through the "Quick-fill" valve using the funnel provided in the accessory kit. Wipe the flapper and O-ring with a soft dry towel after abrasive powder is added with the funnel to get an airtight seal. Don't overfill the tank. 1 1/4" from the top is maximum. Make sure the tank cover is tightened snugly.
To change abrasives, see instructions in Section 3.

DirectFlo SETUP TIPS

1 Verify that the hose from the dust collector is connected to the 4" collar on the back panel of the WorkStation. For optimum dust collection, the hose should be as short as possible.

2 Position the DirectFlo on top or along side of the WorkStation.

3 Verify the DirectFlo is connected to a dry air supply of 80 - 140 PSIG. Bottled CO_2 or nitrogen is recommended if dry air from a compressor is not available. See page 2-6 of the manual for instructions.
Note: If the pinches on the rear panel do not close when the machine is turned on, the air supply pressure is probably too low.

4 Pass the handpiece through the small port on the side of the WorkStation. The "Tank Vent" hose should be pushed 2-3" through a grommet on the backside of the WorkStation.

5 Add abrasive to the tank through the "Quick-fill" valve using the funnel provided in the accessory lot. Wipe the flapper and O-ring with a soft dry towel after abrasive powder is added with the funnel to get an airtight seal. Don't overfill the tank. 1 1/4" from top is the maximum. Make sure the tank cover is tightened snugly. To change abrasives, see instructions in Section 3 of the manual.

6 Turn on the facility dust collector.

7 Turn the DirectFlo Power ON. Adjust pressure regulator to desired blasting pressure (see Section 3 of the manual for details).

8 Place the item(s) to be blasted into the WorkStation. Hold the handpiece firmly and direct the nozzle toward the area to be blasted. Never point the nozzle toward the glass window. Begin blasting by depressing the footswitch.

9 The speed and type of cut will vary with the distance and angle of the nozzle. See section 3 for concise information.

10 To shut down the system, turn the Power switch to OFF and press the Pressure Release valve. Allow 30 seconds for the tank to de-pressurize. Verify that the pressure gage reads zero.
NOTE: There is no need to depressurize after each use. Frequent shutdown causes excessive wear and will waste abrasive. The DirectFlo is

Figure 2-2: DirectFlo Reference Sheet

Figure 2-2 is an illustration of the Reference Sheet that comes with your DirectFlo. It contains important information you can use to get the most out of your investment. Keep it nearby and refer to it often. However, it cannot substitute for the comprehensive data found in this manual. Prior to setting up and operating your DirectFlo, the operator and the department supervisor should carefully review this entire manual.

What You Received With Your DirectFlo

CAUTION:	The shipping carton containing the PF2400 and accessories weighs 70 to 85 pounds, depending on the model. Use appropriate caution while lifting.

The DirectFlo DF1400 is shipped fully assembled and requires only minimal set-up to use. The following pages describe what is needed, and how to set up and test your micro-abrasive blasting system for proper operation.

Once you receive your DirectFlo DF1400, check the contents of the shipping carton to make sure that you have received all of the items. Besides this manual and the Reference Sheet pictured on the previous page, you should find the standard Accessory Parts Kit. Note that two additional items, a .025" tank orifice, MB1409-25, and a .060" nozzle, PF2110-1 (red), should already be installed on the DirectFlo DF1400.

Open all small packages within the large carton carefully, since many small parts are included with the shipment.

Basic Components of the DirectFlo DF1400

Power Switch

The Power Switch is located on the upper left-hand corner of the front panel. It is not only the primary ON/OFF switch for electrical power, it also pressurizes or depressurizes the unit. The Power Switch will illuminate when the power is “ON”.

Handpiece

The handpiece, which holds the blasting nozzle, should be inserted into one of the holes in the side of the WorkStation provided for this purpose. The DF1400 is a pressurized device. Never depress the footswitch without holding the handpiece firmly in place.

Air Pressure Regulator

The Air Pressure Regulator knob is located on the front panel. It controls the DirectFlo’s operating air pressure, as indicated on the pressure gage directly above it. To adjust the pressure, pull the knob out. Rotate it clockwise to increase the pressure or counterclockwise to decrease the pressure. Push the knob in to lock it in position.

Pressure Gage

The Pressure Gage on the front of the unit indicates the air pressure in the abrasive tank. Typically, operating pressure selected for the process will be between 40 psig and 125 psig.

Abrasive Blend Control

The Abrasive Blend Control knob controls the ratio of the air/abrasive mixture. Turning the knob clockwise increases the concentration of media in the air stream. The Abrasive Blend control is designed for “fine-tuning” the abrasive blast only. Turning the knob counterclockwise to the minimum setting will not stop abrasive flow. The main control for the amount of abrasive in the air stream is the Tank Orifice (explained fully in Chapter 3).

Footswitch

The Footswitch (usually placed on the floor) activates the abrasive PowderGate and the modulator, allowing abrasive to flow from the tank to the blasting nozzle.

“Quick- Fill” or Flapper Valve

The Flapper Valve is located on the top of the tank cover. It is used to fill the tank with abrasive powder. **NOTE:** Only refill the abrasive tank after the DirectFlo Power switch has been turned “OFF” and the unit has been vented.

PowderGate

The PowderGate Valve is used to control the air/abrasive flow from the DirectFlo. The valve protrudes from the rear of the unit. It is designed for high reliability in a production environment.

Figure 2-3: External Component Locations

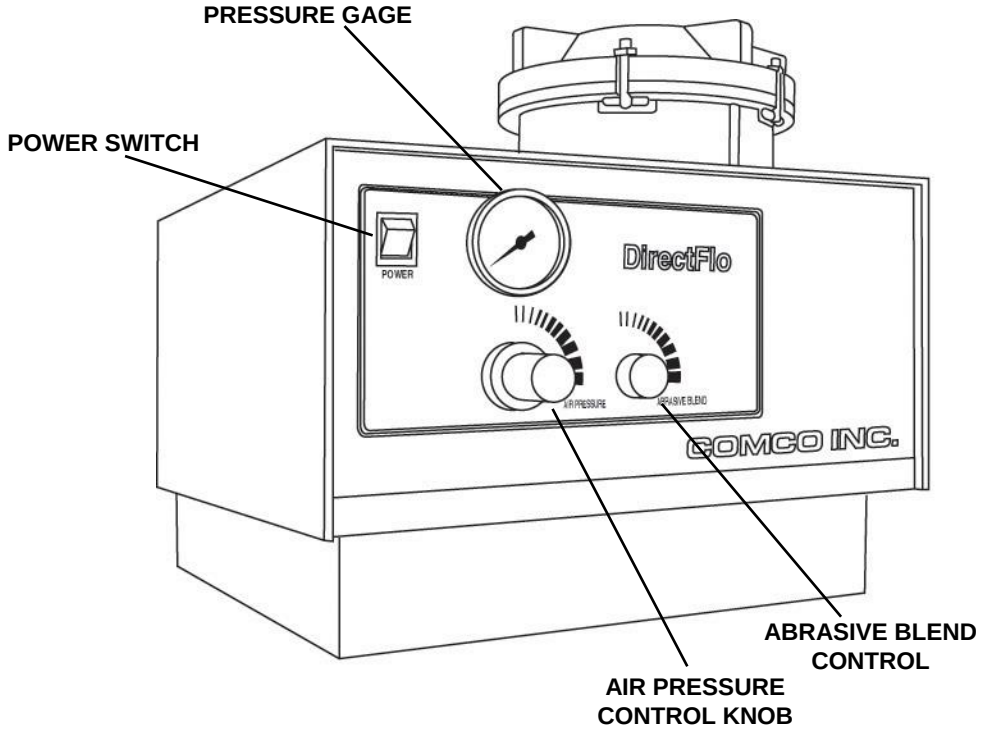

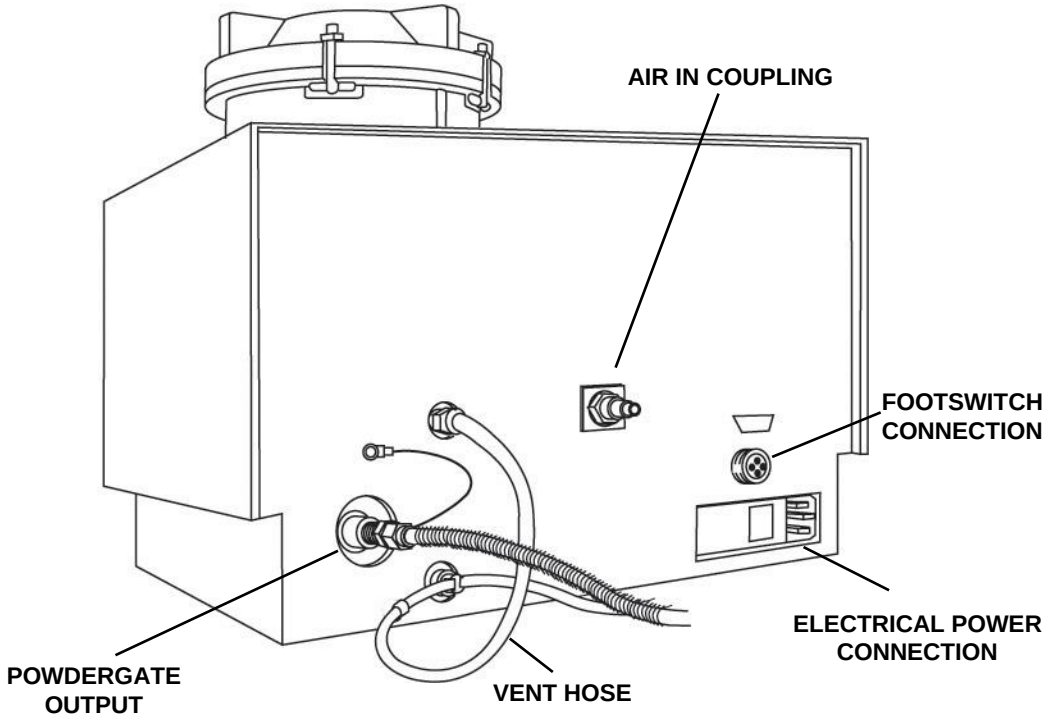

Set-Up and Test

1. Place the DirectFlo within reach of the electrical outlet and the air source. Refer to “The Proper Work Area” discussed at the beginning of this chapter.

> **CAUTION:**
> The DF1400 weighs approximately 65 to 80 pounds (depending on model). Use appropriate caution while lifting.

2. Remove the tank cover by loosening (do not remove) the four nuts with the 9/16" wrench provided in the accessory kit. Let the cover bolts swing down and lift off the tank cover (see figure 2-4).

3. Grasp the powder basket by the lip and lift straight up. Avoid lifting the powder basket near the slot, since this is the weakest point in the lip. The slot is for pouring. It is not a handle.

4. Carefully clean out any foreign material from both the basket and the tank. Check the tank orifice to make sure it is clear; remove it if necessary (see Fig. 3-1). Insert the basket back into the tank by pushing down with a slight twist, to seat the O-ring. Clean off the tank cover and check to make sure that the O-rings are not damaged and that the sealing surface is clean.

5. Wipe off the top surface of the tank and replace the tank cover. Be sure that the tank cover is properly oriented on the tank, with the vent holes at the front and rear. Swing the bolts up into the slots in the cover and tighten the nuts firmly, but not too tight.

6. Remove the protective red cap from the end of the PowderGate’s output connector and connect the Abrasive Hose to the connector. The Abrasive hose is tethered to the DirectFlo’s back panel by the hose’s ground wire. Leave this ground wire attached to the panel.

7. Connect the DirectFlo to a dry air supply using a **1/4” Industrial Shape Quick-Disconnect Coupling Socket** (customer supplied).

   Example couplings: Foster 3 Series SG1513 or McMaster Carr 6536K38

   The blasters air input plug is located on the back of the blaster(see Figure. 2.3).

8. Set the air pressure upstream of the DirectFlo DF1400 to at least 80 PSIG but not more than 140 PSIG.

> **CAUTION:**
> Inlet pressures above 140 psig may damage the DirectFlo DF1400. The DirectFlo DF1400 has an internal pressure relief valve, however, Comco recommends that the system inlet line have a relief valve also.

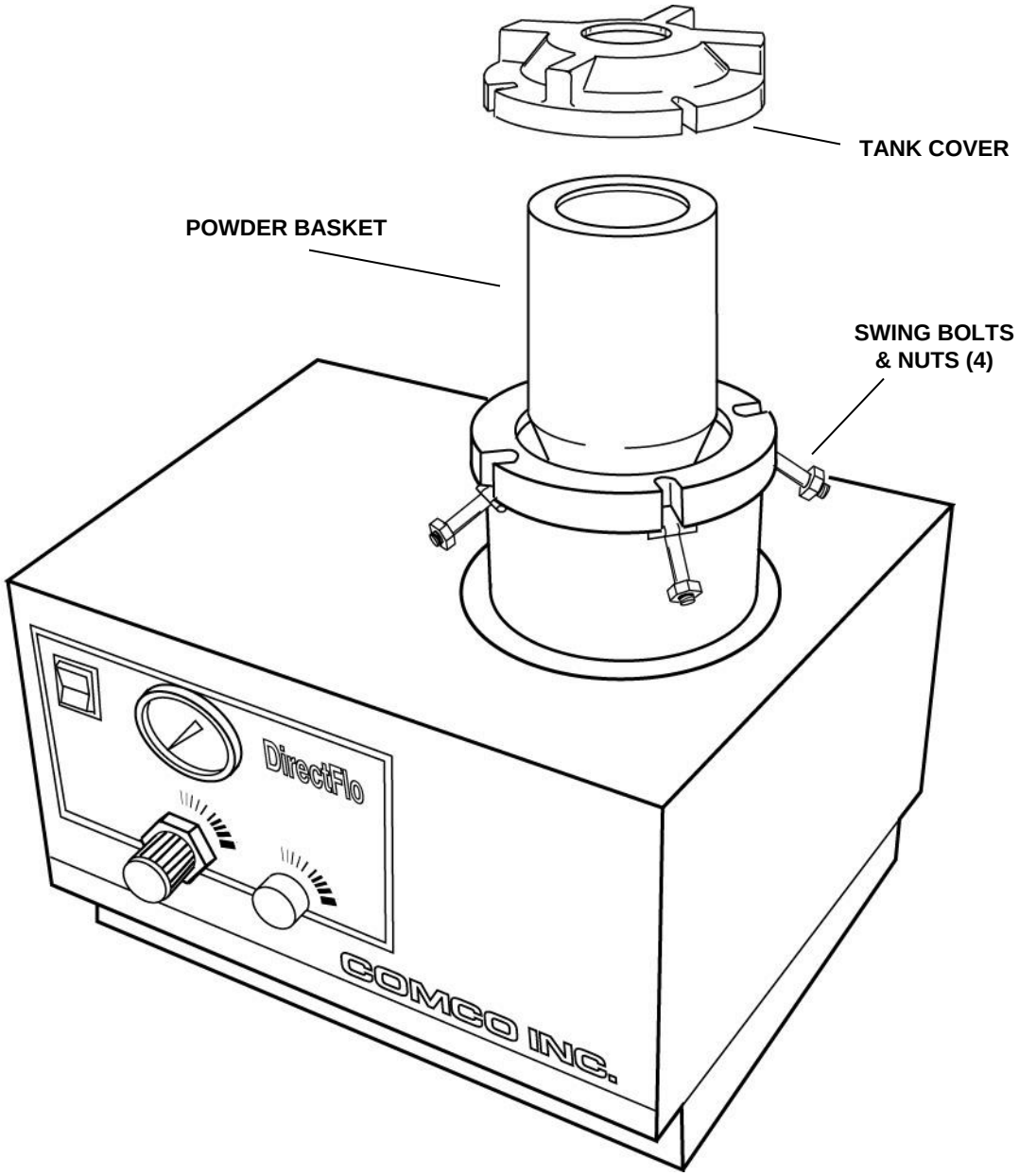

Figure 2-4: Tank Inspection

Set-Up and Test (cont'd)

9. Make sure that the Power switch located on the front of the panel is in the OFF position.

10. Find the power cord in the accessory kit and plug it into the 3-prong male connection located on the back of the unit (see Figure 2-3).

> **CAUTION:**
> The DF1400 can be manufactured for either 115VAC or 230VAC. Check the voltage on the nameplate located on the back panel to see which voltage is correct for your machine.

11. Plug the 3-prong male end of the power cord into the appropriate facility outlet.

12. Find the footswitch in the accessory kit and plug it into the 4-pin connector located at the back of the unit (see Figure 2-3). Place the footswitch on the floor in any convenient position for the operator.

13. Insert the end of the hose connected to the "Tank Vent" on the rear of the machine into one of the tube grips located in the back of the workstation. Push the tubing through the grip 1 to 2 inches, and hand tighten the grip's nut to secure the tubing. When connecting the DirectFlo to an automated system, the vent tube grips can be found on, or near the dust collection outlet of the blast chamber.

> **CAUTION:**
> The air that comes out of the vent hose will contain abrasive. Place the free end of the vent hose into the WorkStation or the dust collector. **Always** secure the free end of the hose.

14. When routing the abrasive hose into the workstation or a system's blast chamber avoid tight hose bends. Use as large bend radii as feasible to reduce internal hose wear. Abrasive hoses wear quickest at their bends and small bend radii accelerates the wear.

15. Turn the Power switch to "ON". The switch should illuminate and the system should start to pressurize with an audible hissing sound (approximately 5 seconds). The PowderGate will close and the pressure gage on the front of the unit should indicate pressure in the unit. Listen for obvious leaks.

> **CAUTION:**
> Do not lean over the abrasive tank while the system is pressurizing.

Set-Up and Test (cont'd)

16. If necessary, adjust the pressure with the "Air Pressure" regulator knob (Figure 2-3) until the needle on the pressure gage is centered at 80 PSI. Pull the knob out to unlock the regulator before adjusting. To increase the pressure, turn the knob clockwise.

17. Firmly hold the nozzle inside the WorkStation or hood, and step on the footswitch. Be sure the nozzle is pointed away from the glass window. Air should immediately escape from the nozzle and the modulator will hum audibly, indicating that it is working properly. Both the air and the modulator should stop when the foot is lifted.

> **CAUTION:**
> The air that comes out of the nozzle contains abrasive. Do not point the nozzle at anything that could be harmed or damaged as a result of abrasive flow, especially the WorkStation glass window.

18. Step on the footswitch again. As air escapes from the nozzle, watch the pressure gage. The needle should remain steady or oscillate slightly around the set pressure. If the air pressure drops significantly, check your air source to ensure that it can consistently deliver at least 6 SCFM of air.

19. Press down and release the footswitch several times to clean out any abrasive from the system.

20. Turn OFF the power using the Power Switch. The abrasive tank should immediately vent through the vent hose and the pressure gage on the front of the unit should rapidly drop towards zero pressure. **The tank takes between 10 and 15 seconds to fully vent.** If the DirectFlo is equipped with an extended powder tank, it will take between 30 and 45 seconds to vent.

21. You are now ready to select the proper abrasive, nozzle and other operational parameters to begin using your DirectFlo. These issues, as well as detailed operational instructions, are discussed in the next chapter.

THIS PAGE LEFT INTENTIONALLY BLANK

Chapter 3: Using the DirectFlo

In This Chapter

- Abrasive selection
- Orifice and Nozzle selection
- General operation of the DirectFlo

The Essence of Micro-Abrasive Blasting

There are many variables that affect the results you will get from the micro-abrasive blasting process. In order to get the most from your DirectFlo, a thorough understanding of these factors is essential.

The single most important factor in getting the maximum benefit from your DirectFlo is in proper abrasive selection. With the right abrasive, you can lightly clean soft materials or deburr machined metal parts.

Once the correct abrasive is chosen, the remaining factors that affect the abrasive action are: the number of particles striking the work area, the velocity of the particles, and the angle of the blast. These factors are controlled by the DirectFlo through the following operator selections:

- Tank Orifice Size
- Nozzle Size
- Nozzle to Work Distance
- Angle of Nozzle to Work Surface
- Air Pressure
- Powder Flow Adjustment Setting

Table 3-1 gives a brief overview of all of these essential factors. Each of them is discussed in detail on the following pages, beginning with abrasive selection.

Table 3-1: General Summary of Factors Affecting Abrasive Blasting

Variable	Comments	Manual Reference*
The Abrasive	The abrasive you use has the most significant impact on how well the unit works. Hardness, sharpness, and particle size all affect cutting speed. In general, the larger the particle size, the faster the cutting or abrading will be.	See the information under the **Abrasive Selection** heading within this chapter.
The Tank Orifice	Other factors being equal, the amount of powder flow is directly proportional to the size of the powder orifice. The orifice should be sized according to the abrasive used, so that a small orifice is not used with large particles.	See the **Tank Orifice** discussion within this chapter.
The Nozzle	Nozzles with larger openings produce larger blast patterns, thus speeding up some blast processes.	See the **Nozzle Size** discussion within this chapter.
The Air Pressure	The higher the pressure, the faster the work will be abraded. Nozzles, hoses, and fittings also wear out faster with higher pressures.	See the **Air Pressure** heading within this chapter.
The Distance between the nozzle and the work	Up to a point, the closer the nozzle gets to the work the faster the material will be removed beneath the nozzle. A distance of about 5-8 times the nozzle diameter will generally remove the maximum material.	See the **Nozzle Distance** discussion within this chapter.
The Angle of the abrasive stream to the work	Cutting rate will improve as the nozzle is tipped at an angle relative to the surface of the material. Tipping the nozzle also tends to work better for cleaning a surface.	See the **Angle of Approach** heading within this chapter of the manual.
The Abrasive Blend control	Fine adjustments in the amount of powder in the air stream can be made with the powder flow control knob on the front panel. Less powder and more air tend to cut faster at close nozzle distances.	See the **Abrasive Blend Adjustment** heading within this chapter.

* Additional Information can be found in these chapters.

Abrasive Selection

An abrasive material has three characteristics that affect its cutting action: hardness, sharpness (shape), and particle size. The most common abrasive materials are listed below.

Material	Hardness	Shape
Sodium Bicarbonate	Soft	Needle
Walnut Shell	Soft	Irregular
Plastic	Moderate	Block
Glass Bead	Hard	Sphere
Crushed Glass	Hard	Irregular
Aluminum Oxide	Very Hard	Block
Silicon Carbide	Extremely Hard	Block

The shape of individual particles of an abrasive material gives a good indication of its cutting action. A spherical particle like a glass bead has virtually no cutting ability, while a “blocky” shaped particle has points and edges that will cut and strip away surface material on impact.

In conjunction with the basic shape of the abrasive particle, the hardness of the particle must also be considered. For example, an irregular shaped particle such as crushed glass may have sharper edges than a blocky particle like aluminum oxide, and would typically cut most materials faster. However, since aluminum oxide is a much harder substance, it will cut through hard materials with much more efficiency, since it is less likely to shatter on impact.

Particle Size

Choosing the abrasive material defines both hardness and sharpness, so the only variable remaining is size. Many different sizes of abrasive media are available for use with the DirectFlo (see Table 3-2). Particle sizes between 10 and 300 microns (800 - 75 grit) work best. Since the very small orifices in the DirectFlo may be easily clogged by oversized particles, it is very important that only those materials that have been approved be used and only as directed. Extreme care should be taken that foreign material is not allowed to fall into the powder. **Never try to salvage spent abrasive.**

Typically, the larger the abrasive particle size, the faster the cutting. The DirectFlo propels the abrasive at a velocity approaching 500 feet per second. At this speed, the increased mass of a larger particle will deliver a considerably larger impact to the work surface. Also, coarser abrasives flow more freely than the finer ones, since they are less likely to be affected by moisture from the atmosphere. Moisture is the biggest problem you will face when working with abrasives, since moisture causes the fine abrasive particles to stick together and “clump up”, preventing a free flow from the tank. Problems associated with moisture in the abrasive powder are discussed in detail in Chapter 4.

Table 3-2: Common Abrasives and Their Applications

Comco Type	Abrasive Material	Particle Size			Description/Characteristics
		Average Particle Size		Range (Microns)	
		Micron	Inch		
A	Aluminum Oxide	10	0.0004	5 - 25	The most common abrasive used. A very hard abrasive that cuts well through almost any material, particularly brittle ones. Normally leaves a matte finish, with the surface roughness being dependent upon the abrasive size and the blast pressure. Somewhat sensitive to moisture.
J	Aluminum Oxide	17.5	0.0007	10-25	
B	Aluminum Oxide	25	0.001	15 - 35	
C	Aluminum Oxide	50	0.002	30 - 80	
N	Aluminum Oxide	150	0.006	75 - 200	
D	Glass Beads	50	0.002	40 - 80	Good for light deburring and satin finishing of some metals but not good for cutting. Can be used to remove loose surface particles such as oxides. Sensitive to moisture.
E	Silicon Carbide	20	0.0008	10 - 40	The fastest cutting of the standard abrasives. The best abrasive to deburr stainless steel and titanium parts. Does not absorb moisture. Dark gray or black in color.
F	Silicon Carbide	50	0.002	30 - 80	
G	Sodium Bicarbonate	50	0.002	20 - 150	A very gentle abrasive, good for very light cutting of soft materials. Can be used to remove conformal coating from PCBs. Water soluble and easily removed from delicate parts. Susceptible to moisture and cannot be heated to above +150ºF.
H	Walnut Shell	250	0.010	80 - 300	Gentle abrasive that can clean metal or ceramic surfaces without changing the surface finish. Absorbs moisture easily.
M	Plastic	200	0.008	150 - 300	Good for stripping soft materials, such as paint or conformal coating, from harder substrates.
K	Crushed Glass	80	0.003	40 - 90	For light cutting of soft to medium materials.

NOTE: Always start the work shift with fresh abrasive powder. Powder left sitting in an unpressurized machine overnight can absorb moisture. This contaminated powder can cause flow problems. Keep powder containers sealed and stored in a cool, dry place.

Tank Orifice

The powder basket within the abrasive tank is fitted with a single orifice at the bottom through which all powder must pass (see Figure 3-1). The amount of powder flowing is directly proportional to the size of this opening.

As seen in the table below, a small increase in the diameter of the tank orifice results in a large increase in the area of the opening. In other words, increasing the tank orifice by only a few thousandths of an inch, can almost double the amount of powder that will pass through it and out the nozzle. This is a very important factor, since the number of abrasive particles striking the work surface has a direct relation to the speed of the cutting action.

Diameter, in.	Area, in^2.	Comco P/N
0.018	2.5×10^{-4}	MB1409-18
0.025	4.9×10^{-4}	MB1409-25
0.030	7.1×10^{-4}	MB1409-30
0.040	12.6×10^{-4}	MB1409-40
0.060	28.3×10^{-4}	MB1409-60

Some judgment is required in selecting an orifice. A very small orifice should not be used with powders of large particle size. Likewise, a very large orifice may cause a small nozzle to plug from excessive powder in the line. See Table 3-3 for guidelines in selecting orifice size.

The DF1400, as shipped from the factory, is equipped with the 0.025" diameter orifice (MB1409-25). A .030” orifice is provided in the accessory parts kit. The orifice will have a number stamped on the side that corresponds to the dash number, and opening size. Refer to the table above to determine the size.

To change the tank orifice, refer to the procedures in Chapter 2, “Set-up and Test”, to remove the powder basket from the tank. The tank orifice can then be removed from the powder basket with a 1/4" nut driver (see Figure 3-1). The replacement orifice should be installed securely, but not too tight. Insert the powder basket back in the tank and replace the tank cover.

For improved performance and longer life, all Comco orifices are carbide lined.

Table 3-3: Orifice Selection Chart

Abrasive Particle Size			Recommended Tank Orifice
Average Particle		Range (Microns)	
Micron	Inch		
10	0.0004	5 - 30	0.025
20	0.0008	10 - 40	0.025
25	0.001	15 - 45	0.025
50	0.002	30 - 80	0.025
150	0.006	65 - 200	0.030
200	0.008	80 - 300	0.040
250	0.010	150 - 300	0.060

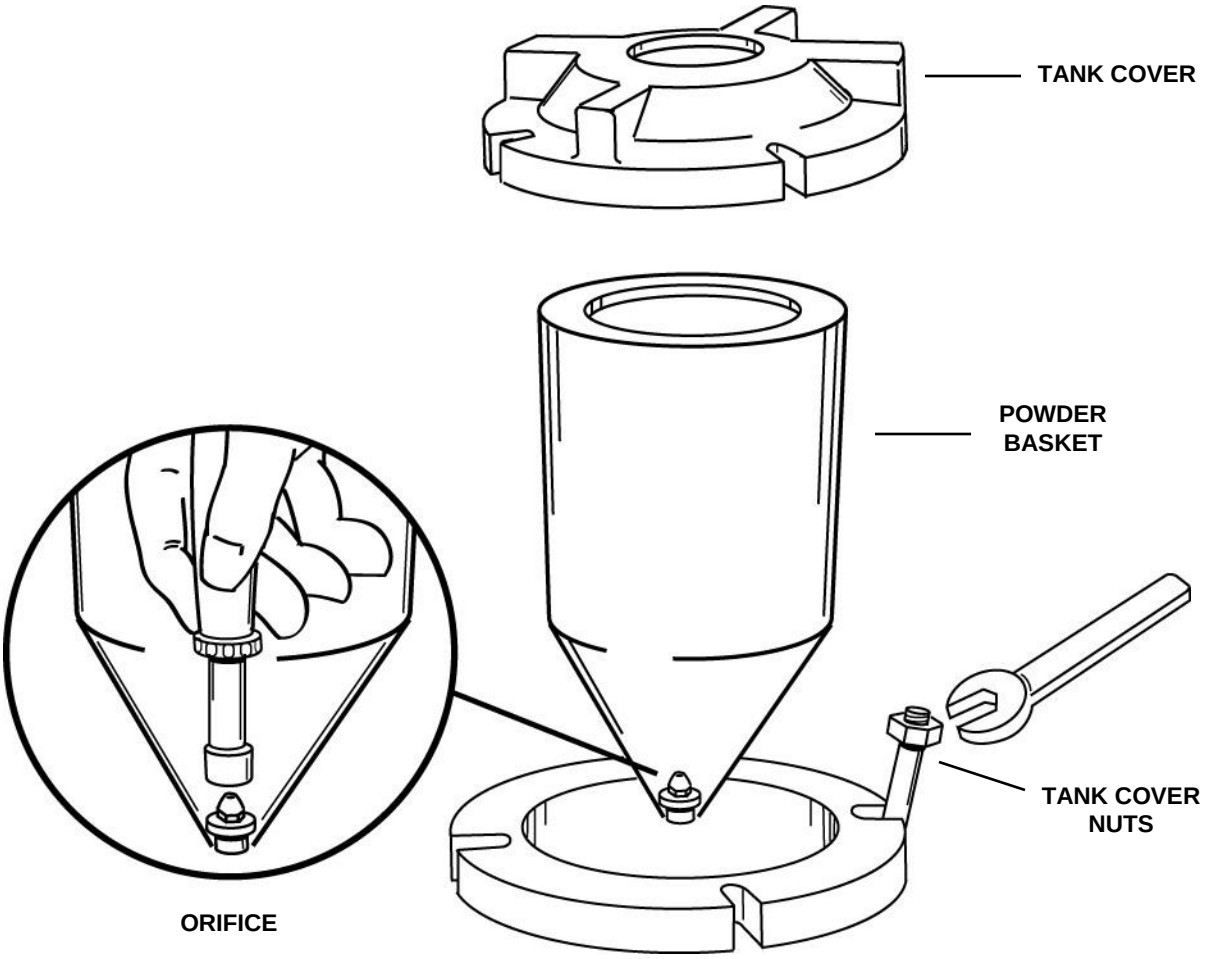

Figure 3-1: Changing the Tank Orifice

Rev 5/2014

Nozzle Size

The type of work to be done usually dictates the type of nozzle that must be used with the DirectFlo. A very tiny, precise cut or hole requires a small nozzle. If the blast pattern is not critical, a large nozzle is preferred. With larger nozzle openings, more abrasive can flow, and thus cutting speed is increased and efficiency will improve.

Comco offers many different sizes and configurations (see Figure 3-2), from a 0.030" diameter round nozzle, to 0.016" x 0.190" rectangular. For most applications a round nozzle would be preferred due to the precise spray pattern. However when abrading large areas, a rectangular nozzle may be used as a "brush" or "fan", which accomplishes such jobs faster than could a round nozzle. Narrow cuts may be obtained with much less trouble and at greater speed if a rectangular nozzle is used and properly oriented with respect to the cut. This may require fixturing if precision is required.

As shipped from the factory, the DF1400 has the 0.060" diameter (red) nozzle installed in the handpiece. This nozzle will provide the best cutting for general applications and will handle all of Comco's abrasives.

Nozzle Selection

The nozzles provided with your DirectFlo are chosen because of their wide range of applications. However, since every application is different, these nozzles may not always give the best results. For this reason, many different nozzle sizes and configurations are available for different cutting purposes (see Table 3-4). All are fabricated from the hardest grade of long wearing tungsten carbide bonded into aluminum holders.

Nozzles and holders which turn the abrasive flow 90 degrees are often useful and are available for some sizes. Comco can also custom-engineer special nozzles for unique applications.

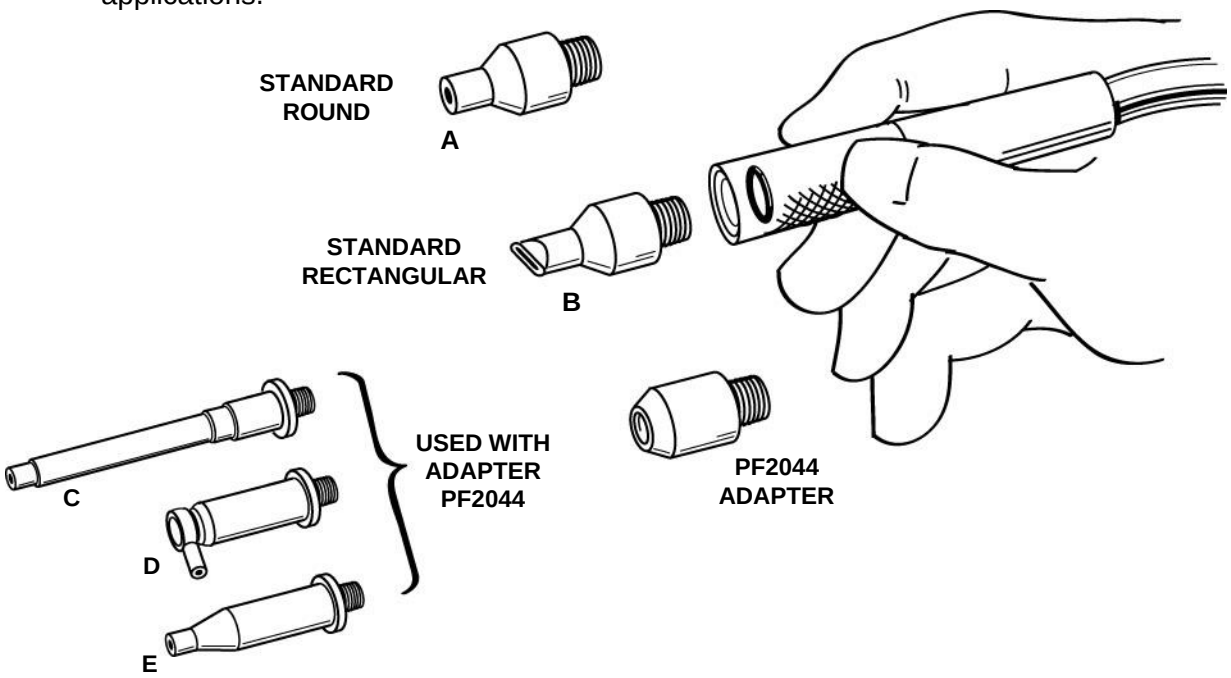

Figure 3-2: Changing the Nozzle

Table 3-4: Nozzle Chart [1]

Item Fig.3-2	Comco P/N	Holder Color	Size I.D.	Size (I.D. mm)	Tip O.D.	Recommended Tank Orifice Diameter
The Standard DirectFlo DF1400 Round and Rectangular Nozzles						
A	PF2110-1	Red	0.060	1.5	0.125	0.018 - 0.046
A	PF2110-3	Blue	0.080	2.0	0.156	0.018 - 0.046
B	PF2110-4	Red	0.008 x 0.150	0.2 x 3.8	0.195	0.018 - 0.030
B	PF2110-6	Blue	0.016 x 0.190	0.4 x 4.8	0.250	0.018 - 0.046
Straight Round, and Rectangular Nozzles Requires Comco Nozzle Adapter PF2044 (see Figure 3-2)						
E	MB1500-11[*]	Green	0.030	0.8	0.074	0.018 - 0.040
E	MB1500-29	Yellow	0.046	1.3	0.125	0.018 - 0.046
E	MB1500-23	Black	0.008 x 0.150	0.2 x 3.8	0.195	0.018 - 0.040
E	MB1500-32	Blue	0.012 x 0.150	0.3 x 3.8	0.195	0.018 - 0.046
Straight Round Nozzles with Extended Carbides (1.5 inches long) Requires Comco Nozzle Adapter PF2044 (see Figure 3-2)						
C	MB1503-2	Green	0.030	0.8	0.074	0.018 - 0.040
C	MB1503-3	Yellow	0.046	1.2	0.120	0.018 - 0.046
90-Degree Angle Nozzles Requires Comco Nozzle Adapter PF2044 (see Figure 3-2)						
D	MB1501-14	Green	0.030	0.8	0.074 [2]	0.025 - 0.040
D	MB1501-28	Yellow	0.046	1.2	0.125 [2]	0.025 - 0.046
Straight Nozzles, High Performance Requires Comco Nozzle Adapter PF2044 (see Figure 3-2)						
E	MB1520-30	Green	0.030	0.8	0.074	0.025 - 0.040
E	MB1520-46	Yellow	0.046	1.2	0.125	0.025 - 0.046
E	MB1520-60	Red	0.060	1.5	0.125	0.025 - 0.046

[1] Dimensions are in inches unless noted otherwise.
[2] Overall width is approximately 2".
[*] Should only be used with a multiple nozzle array. See page 3-11 and Chapter 6, Options.

Rev. 8/11

Nozzle Distance

The velocity at which the abrasive particles are expelled from the nozzle produces a well-defined stream that only flares about 7 - 10 degrees. Therefore, the distance the nozzle is held from the work surface will determine the size of the blast pattern as well as the material removal rate (or cutting action). Generally, as the nozzle is moved closer to the work, the blast pattern decreases and the material removal rate increases. What this means is, the distance the nozzle is held from the work surface will determine whether you get a deep, narrow cut with well defined edges, or just a light abrasion over a large area.

Abrading vs. Cutting

The width of the cut or hole produced by a round nozzle will be approximately the same diameter as the nozzle, if the distance is less than 5 times the diameter of the nozzle opening. Likewise, the cut width will increase to 3 times the nozzle diameter at a distance of 25 times the opening and to 5 times at a distance of 40 times the opening. Increasing the distance of the nozzle, the walls of a cut or hole will become increasingly tapered and the top edge will be more rounded. At very long distances (over several inches) there will be very little cut definition, but rather a general "blasting" of the surface. Most cleaning and peening operations are done in this manner.

Although cutting action increases as the nozzle is moved closer to the work surface, it should be noted that the material removal rate reaches a maximum when the spacing between the nozzle tip and the work is about 5-8 times the nozzle opening diameter. Moving the nozzle closer than this tends to start slowing the cutting rate as particles bounce back and collide with each other. Also, as the hole becomes deeper, the diameter will increase due to abrasive working on the sides of the cut. Deep holes or cuts with relatively straight sides may be obtained if the cut is interrupted frequently and excess abrasive removed.

These rules change somewhat for rectangular nozzles since the abrasive flow is more of a fan and the cut character is more a function of the smaller dimension of the rectangle than the greater width. Rectangular nozzles offer the advantage of a very narrow cut without the disadvantage of very slow cutting.

Angle of Approach

Typically, a nozzle held perpendicular to the work surface is only done for precision drilling applications. In most cases, it is far easier to obtain the desired results from abrasive blasting with a nozzle held at an angle. The resulting blast pattern when the nozzle is at an angle to the work surface does not tend to dig holes or produce sharp edge cuts.

As the nozzle is tipped at an angle to a surface, the cutting of a groove will improve, since the action is self-cleaning. In this manner, a saw cut may be made with relatively straight sides through relatively thick materials. In any case, nozzle angle can be adjusted in two planes to result in at least one side being cut perpendicular to the surface.

Multiple Nozzle Arrays and Splitters

High volume applications often require some type of fixturing or automation. In many cases, multiple nozzles can be integrated to combine several blasting operations into a single station. The DirectFlo is specifically engineered with the capability to supply sufficient air flow and abrasive media to drive up to 4 nozzles. This process is achieved without any adverse effects of leaning out the abrasive stream.

Supplying abrasive to multiple nozzles is accomplished by integrating wear resistant splitters that evenly divide the air stream generated by the DirectFlo. The splitters are engineered to efficiently channel the abrasive into multiple lines without causing the destructive turbulence often found in this type of device. Installation instructions and additional information about splitters can be found in Chapter 6, Options.

Note: Splitters will not supply appropriate abrasive flow to all types of nozzles. Contact Comco Technical Support for additional information about splitter capabilities.

Air Pressure

The simplest method of changing cutting speed is to vary the air pressure to the tank with the “Air Pressure” adjustment knob. Increasing the pressure increases the velocity of the abrasive particles. Therefore, the higher the pressure, the faster the work surface will be abraded. It should be mentioned that the nozzle, hose, and fittings might also wear at a faster rate under higher pressure conditions.

Abrasive Blend Adjustment

Cutting speed and surface texture is affected by media concentration. The best concentration can only be determined by testing each application. The abrasive flow circuit from the tank incorporates a media concentration adjustment labeled “Abrasive Blend” on the front panel (see Figure 3-4). This adjustment controls the amount of clean, abrasive-free air that is mixed with the outgoing abrasive air stream from the tank. Turning the knob clockwise increases the media concentration. As the knob is turned counter-clockwise, from the “MAX” position, more and more clean air is added, reducing the quantity of abrasive in the outgoing air stream. Begin with the knob in the “MAX” position, and then gradually adjust the knob counterclockwise until the desired cutting rate is achieved.

General Operation of the DirectFlo

This section gives step-by-step procedures on how to use the DirectFlo. Before proceeding, make sure you have:

- √ Reviewed the safety precautions in the introductory section of this manual.
- √ Properly set up your DirectFlo according to the procedures in Chapter 2.
- √ Selected the proper abrasive for your application.
- √ Installed the proper tank orifice for the abrasive powder you are using.
- √ Selected the proper nozzle for your application.

Before You Begin

1. Check the tightness of the tank cover. The O-ring seal must be firmly seated against the tank.

2. Check to see that the end of the tank vent hose is inserted into the back of the WorkStation or dust collector hose.

3. Depress the tank cover flapper (see Figure 3-3), and using the funnel from the accessory kit, pour the selected abrasive powder into the tank, filling it at least half full. **Do not overfill.** Tap the flapper as it closes so that any powder on it will be dislodged into the tank and not interfere with sealing of the O-ring.

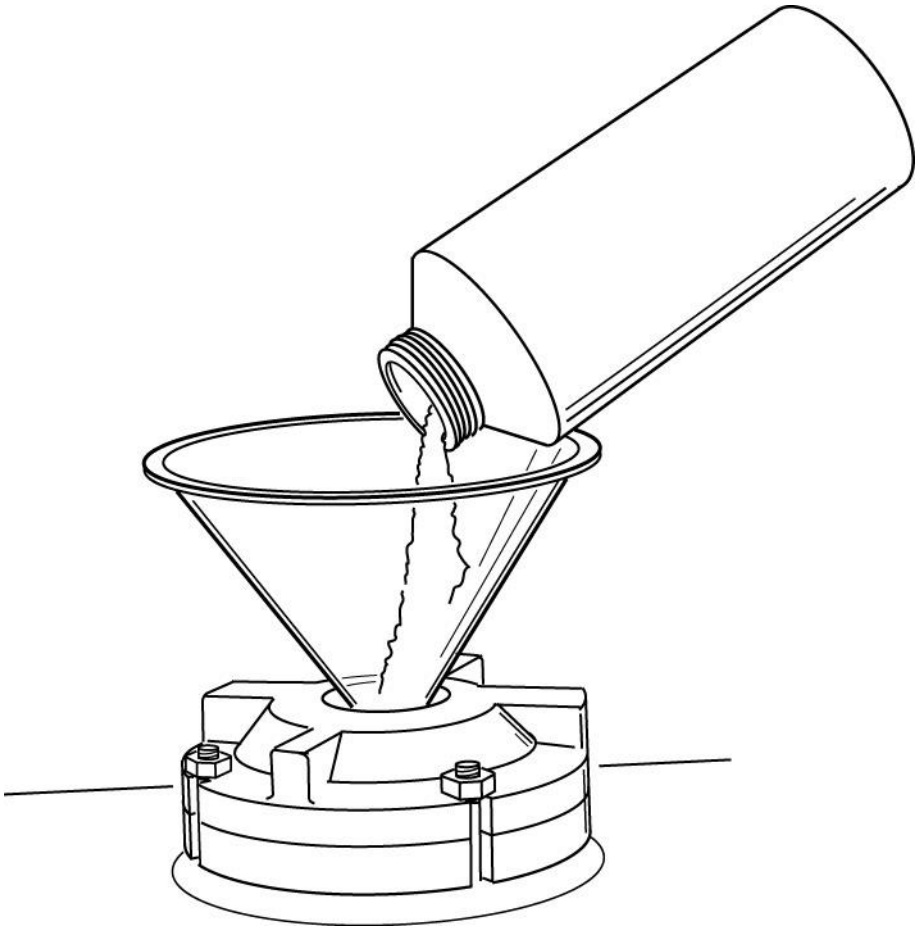

Figure 3-3: Filling the Abrasive Tank

Figure 3-4: Controls and Indicators

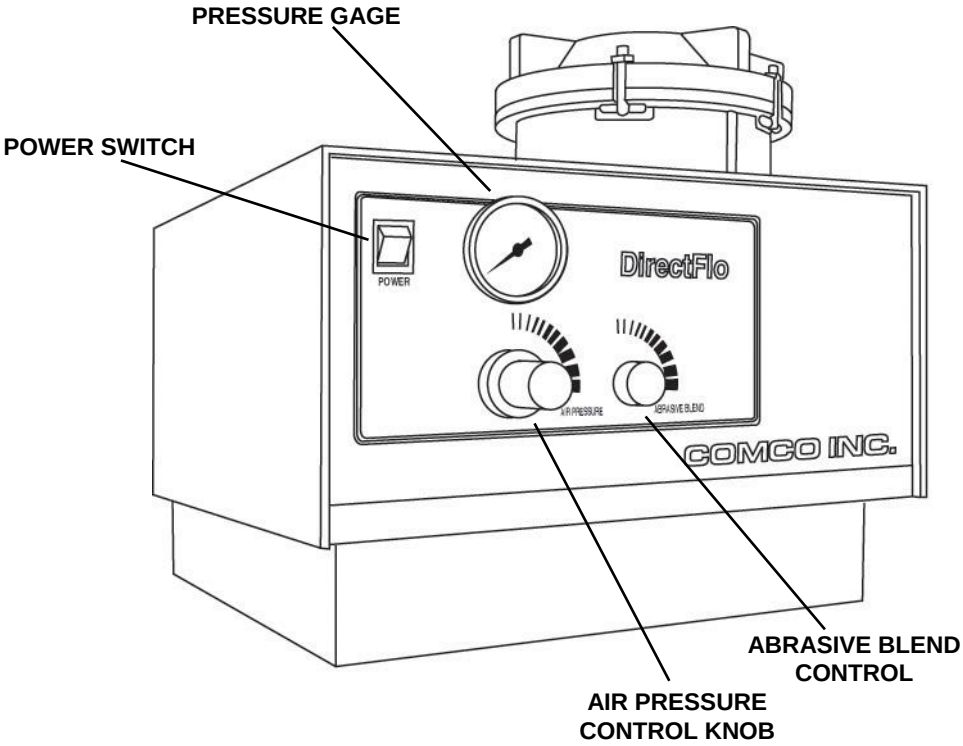

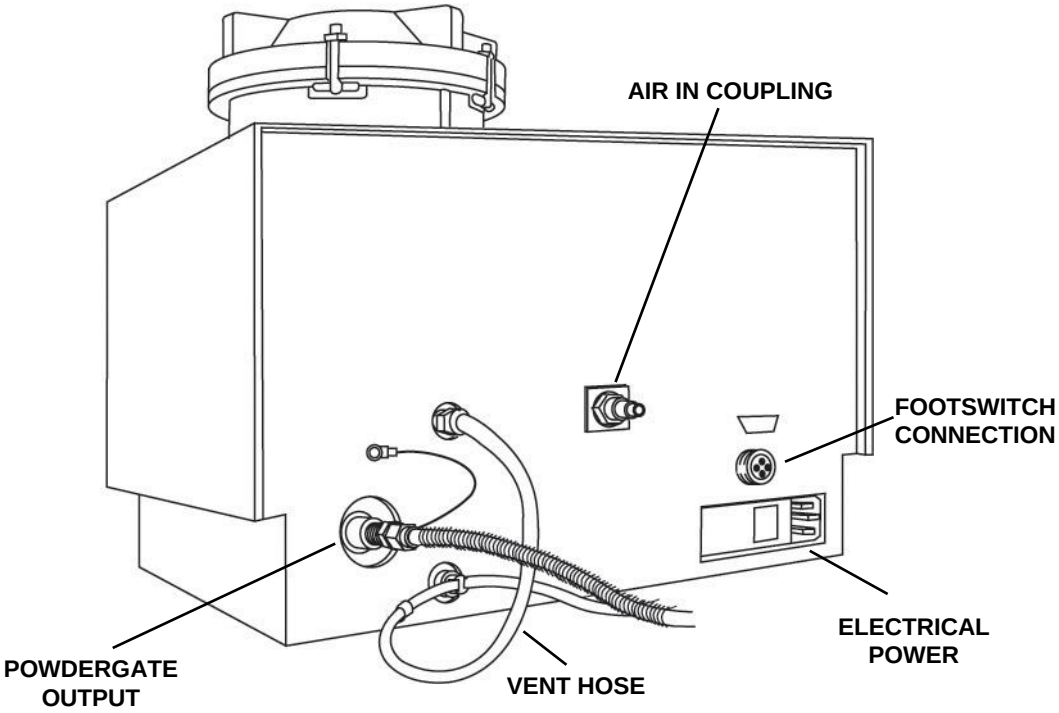

Power Up

1. Switch "Power" to the "ON" position. The Power indicator should light.

2. Check to see that no air is escaping from the tank cover. If a leak is discovered, follow the “Stopping-Refilling the Tank” procedure presented later in this chapter.

3. Adjust the “Abrasive Blend” knob to “MAX” (fully clockwise).

4. Adjust the "Air Pressure" knob as necessary until the needle on the pressure gage is centered at about 80 psi. To adjust the pressure, pull the knob out. Rotate it clockwise to increase the pressure, or counterclockwise to decrease the pressure. Push the knob in to lock it in position.

Blasting

1. Place the work piece in the WorkStation. The window will provide a suitable transparent barrier between the operator’s face and the work piece to prevent flying abrasive particles from entering the eyes, nose, or mouth.

2. Turn on the dust collector that is connected to the WorkStation.

3. Install the appropriate nozzle in the handpiece, being sure that the O-ring is in place, and firmly seat the nozzle finger tight. The machine is initially equipped with a 0.060" diameter nozzle (red), which is suitable for most abrasives and cutting purposes.

4. Make sure the handpiece is inserted into the WorkStation through one of the side openings. Grasp it firmly as if it were a pencil, aiming the tip of the nozzle at the work piece. The tip should be about 1/4" to 1/2" away from the surface to be blasted (optimum distance for cutting is 5-8 times the nozzle outlet diameter).

CAUTION:
The air that comes out of the nozzle contains abrasive. Do not point the nozzle at anything that could be harmed or damaged as a result of abrasive flow, especially the WorkStation glass window.

5. Step on the footswitch to start blasting. The PowderGate will open and the modulator will start to hum. Abrasive will continue to flow as long as the footswitch is pressed. Move the handpiece or the work piece as required by the job.

6. If more or less abrasion is desired, turn the "Air Pressure" knob to raise or lower the blasting pressure.

Blasting (cont'd)

7. To change cutting speed, type of cut, or surface finish produced, experiment with nozzle distance and angle of the nozzle with respect to the surface of the work piece. Refer to Table 3-1 and the beginning of this chapter for factors that affect abrasive blasting results.

8. During normal blasting, it is good practice to keep the powder flowing continuously. However, under some circumstances, it may be desirable to "pump" the powder by periodically releasing the footswitch for a few seconds. Due to the nature of the modulating process in the mixing chamber, this procedure may cause spurts of abrasive powder and increase the cutting rate. Normally it will only work with relatively large nozzles, since spurts of powder may plug smaller nozzles.

9. The speed and quality of a cut can be affected by the concentration of abrasive media in the air stream. This is adjustable using the Abrasive Blend adjustment knob. Turning the knob counterclockwise decreases the media concentration.

10. When finished blasting, you may shut down the DirectFlo by pressing the Power switch to "OFF". The tank pressure will automatically vent through the vent hose. Tank pressure will take 10 to 15 seconds to fully vent. If the DirectFlo is equipped with an extended powder tank, it will take between 30 and 45 seconds to vent.

Note: If the stop is only for a short period, the power may be left on. Standby power loss is small and no damage will result to the equipment with pressure on the system.

Refilling the Tank

1. Shut down the DirectFlo by pressing the Power switch to "OFF". Tank pressure will take 10 to 15 seconds to fully vent. If the DirectFlo is equipped with an extended powder tank, it will take between 30 and 45 seconds to vent.

2. The tank may be refilled as soon as the pressure drops to zero and the flapper opens easily. Insert the funnel into the Flapper valve (see Figure 3-3) and pour in the abrasive. **Do not overfill the tank.**

3. Tap the Flapper as it closes so that any powder on it will be dislodged into the tank and not interfere with sealing of the O-ring.

Changing the Abrasive

1. Shut down the DirectFlo by pressing the Power switch to "OFF". Tank pressure will take 10 to 15 seconds to fully vent. If the DirectFlo is equipped with an extended powder tank, it will take between 30 and 45 seconds to vent.

2. Loosen (do not remove) the four cover hold-down bolts with the 9/16" wrench provided in the accessory kit. Let the cover bolts swing down and lift off the tank cover (see figure 2-4).

3. Grasp the powder basket by the lip and lift straight up. Avoid lifting the powder basket near the slot, since this is the weakest point in the lip. The slot is for pouring powder out, it is not a handle.

4. Empty the powder from the basket into a suitable waste container. **Do not try to save this abrasive.**

5. Carefully clean out any remaining powder from both the basket and the tank. The preferred method is by using a vacuum, or slip the dust collector hose off the back of the WorkStation and use it to vacuum the inside of the basket, tank and cover.

6. Insert the basket back into the tank by pushing down with a slight twist, to seat the O-ring.

7. Wipe off all abrasive on the tank top surface and the tank cover O-rings to ensure that the sealing surface is clean. **It is critical that the tank cover seals properly to the tank surface.** Check to make sure that the O-rings are not damaged. Replace the O-rings if necessary (see Chapter 5: Trouble-shooting and Repair, “Tank Cover”).

8. Replace the tank cover. Be sure that the tank cover is properly oriented on the tank, with the vent holes at the front and rear. Swing the bolts up into the slots in the cover and tighten the nuts firmly, but not too tight.

9. Turn the Power “ON” to pressurize the unit. Hold the handpiece and depress the footswitch for approximately 30 seconds to purge any remaining abrasive out of system.

10. Follow the directions in “Refilling the Tank”, above.

THIS PAGE LEFT INTENTIONALLY BLANK

Chapter 4: Maintenance

In This Chapter

- Maintenance intervals
- Extending the life of wear items
- Replacing worn out components

Normal Maintenance

General Notes

The maintenance intervals given in this chapter are intended for use as guidelines only. The machine's frequency of use will determine how often these maintenance items will need to be performed. Contact Comco if you have questions.

Note the following cautions before beginning any maintenance or repair task:

- ♦ Unless specifically directed otherwise, ALWAYS depressurize the unit and unplug it before removing the cover or doing any maintenance or repairs.
- ♦ There may be sharp edges inside the cabinet, which could cause injury to personnel or damage to components.
- ♦ Observe all safety precautions provided within this manual.

Tools

In addition to standard hand tools, the following items may be required for maintenance of the DirectFlo:

- √ A small stiff brush for cleaning threads and components.
- √ The 1/4" nut driver supplied by Comco in the accessory kit.
- √ The 9/16" wrench supplied by Comco in the accessory kit.

Table 4-1: Maintenance Intervals

Interval	Item	Maintenance
Weekly	Nozzles	Inspect nozzle tips for wear. Replace if necessary.
Monthly	Vent Pinch Hose	Reposition hose in Vent Pinch
	Handpiece Nose	Inspect the Handpiece Nose for wear. Replace if necessary.
	Tank Cover & Basket Assembly	Inspect the O-rings (5). Inspect for worn Feedthru Bushings in cover. Check cover for leaks.
	Modulator	If the DirectFlo is used heavily, it may be necessary to inspect the modulator for wear on a monthly basis (see directions below).
	PowderGate Nosepiece and Valve Seat	Test for air leakage out of nozzle when blast is off.
	Tank Orifice	Inspect the tank orifice for excessive wear or clogging.
	Air Dryer	Service Air Dryer. Inspect powder storage conditions.
6 months to 1 year	Entire Unit	Inspect the power cord and footswitch cable. Remove the cover and check for internal leaks. Check all of the items that follow in this table.
	Modulator	Inspect the modulator for wear (see directions in Chapter 5).
	Filter Bowl	Check for accumulation of powder. Clean if necessary. (See directions below.)
	Hose Connectors	Inspect hose connectors for wear. Replace if necessary (see description below).
	PowderGate	Remove and disassemble. Inspect internal components for wear. (see directions in Chapter 5)
	Vent Pinch Assembly	Inspect pinch assembly for worn or inoperable parts.
	Tank Cover & Basket O-rings	Replace (See directions following)

NOTE

With an abrasive machine, wear to critical parts is inevitable. You can minimize downtime by replacing normal wear items at regular intervals. Comco recommends that the following parts be replaced annually, or every 2000 hours of operation, whichever comes first. See Appendix A for part numbers. See Chapter 5 for replacement instructions.

Tank Cover O-rings (4)
Basket Assembly O-ring
Modulator Housing Assembly
Abrasive Hose Connector
Nozzle Nose (Handpiece)

Parts Subject to Normal Wear

All the parts through which the abrasive flows are subject to wear. These include the nozzle, nozzle nose (handpiece), hose, abrasive hose connector, and the tank orifice. As a general rule, the smaller the opening through which the abrasives must flow, the greater the possibility of wear. Parts also subject to wear are the tank cover O-rings and the modulator.

Abrasive Hose

With the machine off and depressurized, squeeze the Abrasive Hose between thumb and forefinger in the area along the first 2 - 3 inches adjacent to the PowderGate output. It should be evenly firm along its length, without any soft spots. Whenever a soft spot is detected, the hose should be cut back to that point or slightly beyond and reattached to its connector. See the procedures in Chapter 5 to replace the Abrasive Hose and its connectors.

Vent Hose

Periodically the vent hose should be moved about 2" through the pinch assembly on the rear panel (with air pressure off). This will allow the pinch to squeeze the hose in a different spot. The movement will greatly increase the life of the hose.

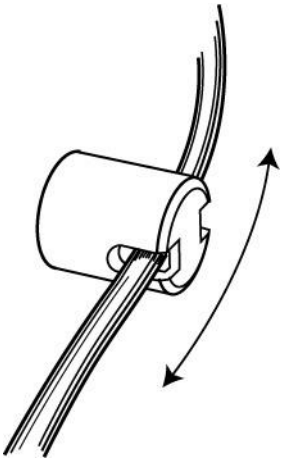

Figure 4-1: Moving the Hose in the Vent Pinch

Parts Subject to Normal Wear (cont'd)

Hose Connectors

The connectors that attach the hoses to the DirectFlo® DF1400 are also subject to abrasive wear. These include the PowderGate exit connector (ST4184), the Handpiece Nose (PF2090) and the Vent Hose Bulkhead Connector (ST4014). Be sure to check them each time you replace hoses. Refer to Chapter 5 of this manual when replacing hose or hose connectors.

Nozzles

Although manufactured from a high grade of tungsten carbide, nozzles are usually subject to the greatest wear. They may start to bell-mouth (widen) within a few hours and be 50% oversize within a day, depending on the aggressiveness of the abrasive powder, the pressure, and the duty cycle. Refer to Chapter 3 of this manual when changing nozzles.

Tank Orifice

The orifice controls the amount of abrasive injected into the mixing chamber. The abrasive nature of the blasting media will cause the orifice to erode over time, increasing in diameter. As the size of the orifice changes the abrasive flow increases, potentially clogging the nozzle or reducing the efficiency of the abrasive.

PowderGate

The PowderGate is a control valve for turning ON and OFF the abrasive flow to the nozzle. The PowderGate has been designed for minimal maintenance. During normal operation it is very easy to monitor the functioning of the PowderGate valve. While the footswitch is not depressed, place a finger over the tip of the nozzle feeling for any escaping air. Air escaping from the nozzle is an indicator that the blue nosepiece of the PowderGate needs to be replaced.

Periodically the valve will need to be maintained. Normal maintenance includes removing the four screws that retain the valve seat assembly and inspecting the blue nosepiece. In addition the valve seat assembly will need to be inspected for grooves or channels that may inhibit proper sealing of the nosepiece. These two items are designed as standard replacement items for the PowderGate valve.

Parts Subject to Normal Wear (cont'd)

Modulator

The modulator is an electro-mechanical device that is activated each time the footswitch is depressed. The stop/start action of the modulator contributes to a consistent flow of abrasive powder from the tank into the mixing chamber and out the nozzle. The principles of operation are described in detail in Chapter 1 of this manual.

Due to its constant movement and its close proximity to the abrasive in the mixing chamber, the mechanical part of the modulator, the modulator housing assembly, is considered a wear point and should be inspected on a regular basis. The frequency, with which the modulator should be inspected, depends on machine usage. Applications that include heavy use, or very aggressive abrasives, may require checking the modulator on a monthly basis. In normal use, or mild abrasive applications, inspection should be done every six months. It is recommended to replace the modulator housing assembly every 2000 hours of operation, which is approximately one year of normal operation. See Chapter 5 for inspection and repair procedures.

General Maintenance

Tank Cover

The tank cover seals the abrasive tank and allows for replenishing the abrasive powder. ***Always fill the tank through the flapper valve and refrain from removing the tank cover unless absolutely necessary.*** Whenever the tank cover is removed to change powder, excess powder must be wiped off the top of the tank and the tank cover O-rings.

Always check to make sure the tank cover is firmly tightened. If the tank cover is not firmly seated so that the O-ring seals properly, abrasive can be forced out by the system pressure and seriously damage both the tank and tank cover. Inspect the tank cover monthly for worn O-rings (4 places) and worn Feedthru Bushings (2 places).

Cabinet and Cables

At six-month intervals, unplug the power cord and inspect it for cracks or cuts. Also check the footswitch cable. Remove the cabinet cover and inspect the inside of the DirectFlo for obvious leaks. Clean thoroughly with a small brush and vacuum hose (never use air or try to blow off abrasive).

Filter Bowl

The filter is part of the Air Pressure Regulator assembly and is designed to trap abrasive that may otherwise be forced back into the “clean air” side of the DF1400, causing major component failures. Check and empty the filter bowl (unscrew it) every six months. If at any time the filter bowl is more than 1/4 full, it could be an indication of a check valve failure and the whole regulator assembly may need to be replaced. See Chapter 5 – “Check Valve”.

Leaks

During normal operation, air may be used at the rate of 3 to 6 cubic feet per minute, depending on nozzle size and air pressure. Small leaks can increase air usage considerably and reduce the efficiency of the DirectFlo. A large drop in air pressure while the machine is operating might be an indication of an air leak.

Leaks usually begin to occur first in the tank cover O-rings. Inspect the O-rings often and make sure the cover is firmly sealed. See the previous discussion on “**Tank Cover**”, in this chapter. See Chapter 5 for further information on leaks.

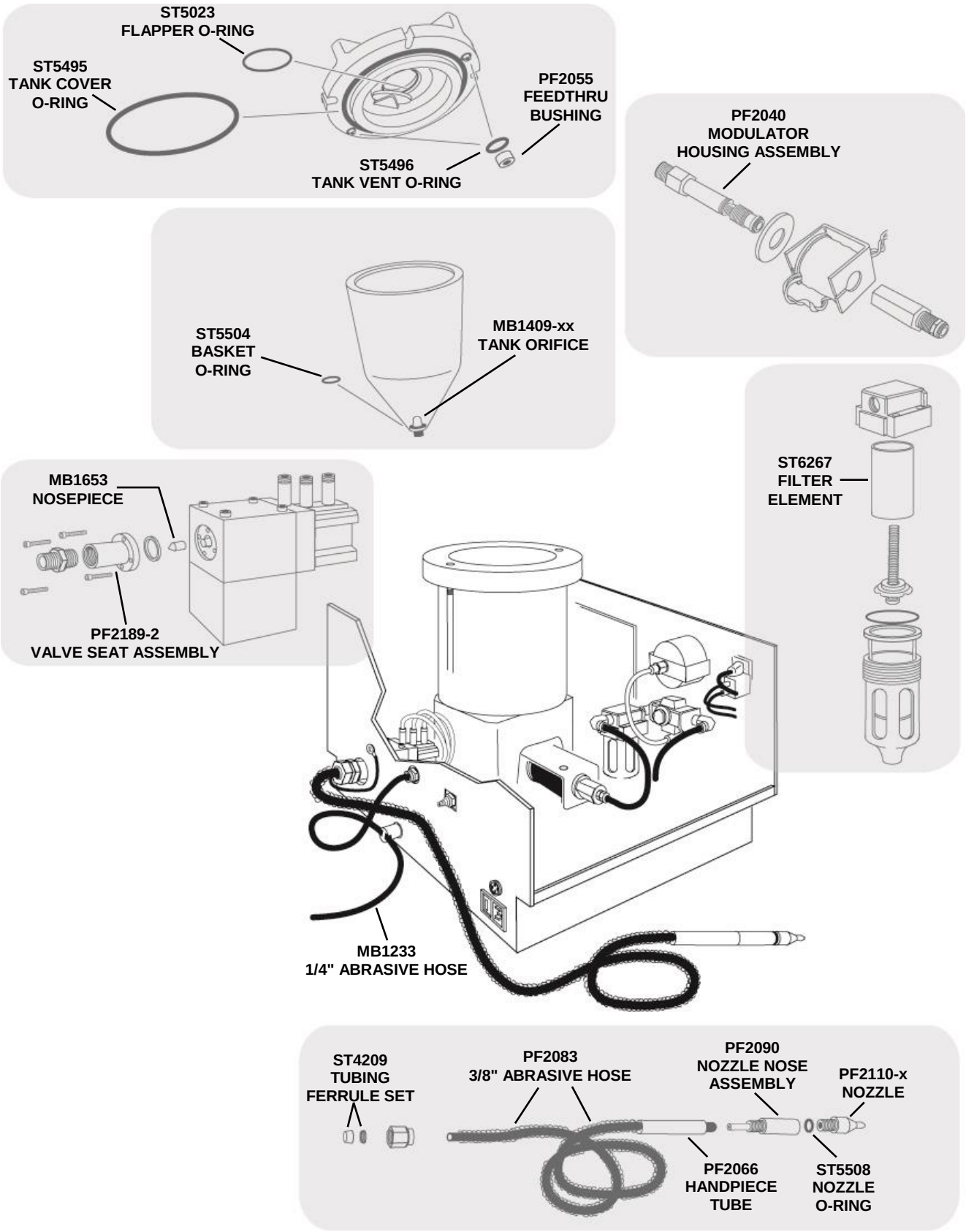

Figure 4-2: Regular Maintenance Items

NOTE: See Appendix Parts List and Drawings for Part Numbers not listed here

General Maintenance (cont'd)

Auxiliary Equipment

The DirectFlo rarely operates as a stand-alone unit. As discussed in Chapter 2, a micro-abrasive blasting system usually contains a dust collector, a WorkStation, and an air dryer, along with the DF1400. Optimum operation of the DF1400 is in many ways dependent upon proper operation of its auxiliary components. Detailed operation and maintenance procedures for these units are contained in each individual unit's instruction manual. Only basic maintenance concerns are mentioned here as part of an overall system maintenance plan.

Dust Collector

Empty the spent abrasive from the dust collector on a regular basis. Typically, this should be done monthly. However in high use facilities, it should be done weekly.

WorkStation

Make sure the WorkStation has good air draw and remains clear of abrasive build-up. If abrasive begins to build up, refer to the above paragraph on "Dust Collector". Keep the glass window clean and replace it if it becomes damaged by abrasive.

Air Dryer

This is the most critical auxiliary unit to optimum DF1400 operation (see the section below on "Moisture"). Desiccant air dryers should be checked for moisture saturation, usually indicated by a change in color. Other types of air dryers should be checked according to the manufacturer's recommendations. Check the system air dryer on a regular basis. Typically, this should be done monthly. However, in high use facilities, it should be done weekly.

Moisture

Contamination of the abrasive powder due to moisture is one of the most common problems associated with micro-abrasive blasting. Moisture causes the powder to "clump up", preventing it from flowing freely from the tank. If the cutting action of your DirectFlo appears to be degraded but air is flowing freely from the nozzle, the problem is usually caused by moisture in the abrasive powder. See Chapter 5 for information on how to check for moisture in the powder.

Where the Moisture Comes From

Moisture can contaminate your powder in two ways: before it is put into the machine, or after it is put into the tank. If your powder is stored in an area of high humidity, or the containers are not kept properly sealed, you are putting contaminated powder into your DirectFlo, which will cause poor performance. Inspect your powder storage facility and handling procedures on a monthly basis.

Abrasive powder should never be exposed to moist air with a relative humidity in excess of 40% for more than a short time. Contaminated abrasive powder should be discarded.

The abrasive powder could also become contaminated with moisture after it has been put into the DirectFlo. If the unit sits depressurized for long periods of time, moisture can enter through the Quick Fill valve and contaminate the powder. To prevent this form of contamination, fill the tank with only the amount of abrasive you expect to use that day. Only fill the tank at the beginning of the work shift. Don't fill the tank and let it sit overnight.

The most common cause of moisture contamination, however, comes from the air compressor that feeds the DirectFlo. Water condensation occurs in compressed air no matter how low the relative humidity might be. For trouble-free operation, the air that mixes with abrasive media must have less than 200 ppm moisture and less than 10 ppm oil. The water traps of most compressors are not sufficient to provide this level of dryness. A positive air dryer should always be installed in the air line and it should be well maintained. Inspect the air dryer monthly to be sure it is operating properly.

Old or poorly maintained air compressors are also a source of oil contaminants in the air supply. Oil in the air supply will not only affect abrasive flow, it can cause major component failures within your DirectFlo, resulting in costly repairs. If you suspect oil in the air supply, you should install an oil filter in the line, in addition to an air dryer.

Comco maintains an extensive library of technical bulletins that address issues including the effects of moisture on the micro-abrasive blasting process and methods for reducing moisture contamination. They are available by contacting Customer Service at 1-818-841-5500 or by viewing our website – www.comcoinc.com – and downloading an electronic copy.

Chapter 5: Trouble-shooting and Repair

In This Chapter

- What to look for if your DirectFlo does not operate properly and how to determine the specific problem
- How to correct most problems which may develop with the DirectFlo
- How to contact Comco's Customer Service Department
- How to order replacement parts for the DirectFlo

Trouble-shooting

This chapter explains what to do if you have any problems with the DirectFlo. The first part of the chapter describes some of the problems that may occur, and the second part contains detailed repair procedures.

NOTE: Improper repairs may void your warranty. If you have any questions, consult with Comco before you do any work on the inside of the DirectFlo DF1400.

Most problems that can occur with your DirectFlo will fall into either one of two categories:

1) No air flow - Nothing happens when you depress the footswitch. Neither air nor abrasive is expelled from the nozzle.

2) No abrasive flow - Air flows freely from the nozzle when the footswitch is depressed. However, there appears to be no abrasive in the air stream, or it flows erratically.

The tables that follow address each of these conditions specifically.

Customer Service

Comco's Customer Service Department is open Monday through Friday from 6:30am to 4:30pm, Pacific Time, to help you with any problems you may have with your DirectFlo. The telephone number is listed below:

Phone: 1-818-841-5500

Check our website for additional tech support information and videos:

www.comcoinc.com

You may also e-mail your questions to:

techsupport@comcoinc.com

(Rev 5/21)

How To Order Replacement Parts

Replacement parts for the DirectFlo may be ordered directly from Comco Customer Service. Please provide the following when ordering parts:

- Your name
- Your company's name and location (city and state)
- The machine, model number, and serial number
- The part number of the component you wish to order

Providing this information will expedite your request and will also ensure that you receive the proper component for your unit.

Replacement Parts Lists

Lists of DF1400 replacement parts, accessories and supplies are provided in this manual as follows:

Items	Location
Accessories: A listing of all components in the accessory kit.	Chapter 2, **Getting Started** and Appendix A, **Parts Lists**
Supplies: Lists of abrasives, nozzles, and tank orifices.	Chapter 3, **Using the DirectFlo DF1400**
Recommended Spare Parts: List of normal wear items.	Appendix A, **Parts Lists**
Major Assemblies: List of principal parts of the DirectFlo with breakdown.	Appendix A, **Parts Lists** and Appendix B, **Drawings and Schematics**
Parts Details: Includes functional, electrical, and pneumatic schematics.	Appendix B, **Drawings and Schematics**
Options: Parts and accessories not included with standard machine.	Appendix A, **Parts Lists** and Appendix B, **Drawings and Schematics**

Common Problems, Causes, and Solutions

Table 5-1: No Air Flow

Problem	Items to Check	Solution
Nothing happens when the footswitch is depressed (No air is coming out of the nozzle)	√ *Is the electrical power ON?*	Verify that the POWER switch is ON and the POWER LIGHT is illuminated. Check the connection of the Power cord and Footswitch cord.
	√ *Is the fuse good?*	Examine the fuse. Replace if necessary.
	√ *Does the gage indicate pressure in the system?*	Verify that shop air pressure of 80-140 psig is supplied to the DirectFlo.
	√ *Is the nozzle plugged?*	If you are using a nozzle with the nozzle adapter, remove the nozzle and depress the footswitch. If a blast of abrasive occurs, the nozzle was plugged. Tap it on the workbench, back end down. Discard the nozzle if it remains plugged. If plugging recurs, either the tank is releasing too much powder or the nozzle is too small for the powder.
	√ *Is the PowderGate operating?*	When cycling the unit ON and OFF with the footswitch an audible clicking sound from the cylinder that opens and closes the PowderGate should be heard. If it is not, see maintenance of the PowderGate below.

Common Problems, Causes, and Solutions (cont'd)

Table 5-2: No Abrasive Flow

Problem	Items to Check	Solution
Cutting ceases but air is flowing freely	√ *Is* any *abrasive flowing?*	Verify the quality of abrasive flow by holding a piece of glass or shiny metal in front of the nozzle and depress the footswitch. If there is no abrasive flow, see below. If flow is erratic, see "Modulator".
	√ *Is the tank empty or almost empty?*	Switch "Power" to "Off". Fill the tank as necessary.
	√ *Is the powder "channeling"?*	Carefully remove the tank cover without disturbing the powder in the tank. Note if there are obvious holes or cracks in the powder, leading down to the orifice. This is caused by damp powder or moisture in the air supply. Check the air supply and the powder storage conditions. Service the air dryer, or install one.
	√ *Is the tank orifice plugged?*	Remove the powder in the tank following normal procedures. Remove the orifice and hold it up to the light. If blocked, clean with high-pressure air or a small wire.
	√ *Is the tank orifice too small for the powder?*	Small orifices should not be used with some abrasives (see Chapter 3, Table 3-3).
	√ *Is the* Modulator *functioning?*	Does it hum audibly when the footswitch is actuated? If not, or if it rattles noisily, the modulator should be checked. See procedures below.

Moisture

If the cutting action of your DirectFlo appears to be degraded but air is flowing freely from the nozzle, the problem is usually caused by moisture in the abrasive powder.

How to Check for Moisture in the Powder

With the Power OFF and the unit depressurized, carefully remove the tank cover so as not to disturb the contents. Is the powder “channeling”? In other words, are there obvious holes or cracks through an apparently solid mass or clumps of powder? If so, you have a moisture problem. See Chapter 4, “Moisture”, on how to prevent moisture from contaminating your powder.

Clogging

Tank Orifice

Moisture or particulate matter contamination in the abrasive powder can cause clogging problems in your DirectFlo. The most likely place for clogging to occur is in the tank orifice. Provided the orifice is sized properly for the type of abrasive being used (see Chapter 3, “Orifice Selection”), the powder should always flow freely from the tank.

Since the tank orifice is the only way for the powder to get from the tank to the mixing chamber, a clog here restricts or prevents powder flow. If air is flowing freely when the footswitch is depressed but there seems to be no abrasive in the air stream, first check for moisture contamination as described in the previous chapter. Then remove the tank orifice (see Chapter 3, “Changing the Tank Orifice”), check it for clogging and clean if necessary. Try to determine if clogging is due to either moisture or particulate contamination.

Nozzle

If the unit is pressurizing and you can see the pinch opening when the footswitch is depressed, but no air is flowing from the nozzle, the nozzle is probably plugged. This is a common problem only when using small nozzles with the nozzle adapter. The most likely cause of nozzle clogging is an oversized tank orifice. Too much powder in the air stream can overload the nozzle and cause clogging (see Chapter 3, “Orifice/Nozzle selection”).

Remove the nozzle. Tap it on the workbench, back end down, to release the clog. Check it by holding the tip to a light. A point of light should be visible through the tip. Discard the nozzle if it remains plugged.

If plugging recurs, either the tank is releasing too much powder or the nozzle is too small for the powder. Refer to Chapter 3 for direction.

Tank Cover

The tank cover seals the abrasive tank and allows for replenishing the abrasive powder by filling through the “quick-fill” flapper valve. ***Always fill the tank through the flapper valve and refrain from removing the tank cover unless absolutely necessary.*** The tank cover should be well maintained to ensure a good seal. Inspect the tank cover regularly for worn O-rings and pitting due to abrasive leakage.

Tank Cover Flapper Valve

The flapper valve allows for quick filling of the abrasive tank. If the valve becomes worn or damaged, replace it with Comco part number MB1145. Refer to Appendix B, Figure 5.

Tank Cover Flapper Valve Replacement Procedure (MB1145)

1. Turn Power OFF and depressurize unit.
2. Remove the tank cover by loosening the four retaining bolts.
3. Using a 3/32” Allen wrench, remove the flapper valve. Replace the O-ring if necessary; see procedure below.
4. Install the new flapper valve (MB1145).
5. Install the tank cover.

Tank Cover O-ring Replacement Procedure

1. Turn Power OFF and depressurize unit.
2. Remove the tank cover by loosening the four retaining bolts.
3. Using long-nose pliers, remove the tank cover O-rings. It is best to replace all three O-rings at the same time. Lift the flapper valve to access the O-ring underneath.
4. Clean the O-ring grooves thoroughly.
5. Press the new O-rings firmly in place. The O-ring Replacement Kit PF2139* includes part numbers ST5023, flapper O-ring; ST5495, large O-ring; and ST5496 (2), vent O-rings for use in this procedure. The kit includes ST5504, basket O-ring, which should also be replaced at this time.
6. Install the tank cover.

* We recommend keeping a spare O-ring Replacement Kit on hand.
Contact Comco Customer Service and ask for part number PF2139.

Tank Cover Feedthru Bushing Replacement Procedure

1. The bushings are bonded into the cover with an anaerobic retaining adhesive. Remove the bushings by twisting out with a Spiral –Flute Extractor.

2. Before installing the new bushing(s) (PF2055) carefully scrape out any of the old bonding compound and thoroughly clean the hole in the cover. Also thoroughly clean the surfaces of the bushing prior to bonding.

3. Bond the new bushing(s) into cover with Locktite 680 retaining compound or equivalent. Allow to cure for at least 1 hour before use.

4. Install new O-rings.

The Handpiece Nose

The handpiece nose is the main part of the handpiece that holds the nozzle. The nose holds together the abrasive hose, handpiece tube and the nozzle. Abrasive will wear away the inside of the nose to a point where it can no longer support the hose. Also, if the nozzle is not tightened firmly into the nose, abrasive leakage will wear away the threads and the nozzle will not fit properly. Refer to Appendix B, Figure 8.

Handpiece Nose Replacement Procedure (PF2090)

1. Remove the nozzle.

2. Unscrew the handpiece tube from the nosepiece and slide it back. Because of the static guard (spring) on the hose, it may be necessary to hold or tape the handpiece back out of the way.

3. Remove the hose from the nosepiece (it may be easier to cut hose).

4. Slip the hose onto the nosepiece. Sometimes a little moisture helps.

5. Screw on the handpiece tube.

6. Install the nozzle.

The Abrasive Hose

The Abrasive Hose will eventually wear out and need to be replaced. The entire Handpiece and Abrasive Hose Assembly (PF2406) can be replaced, or its individual components. Most of the wear in the hose will be in the first 2 or 3 inches at the end that exits from the PowderGate. The proper procedure for cutting and reinstalling the hose is explained below.

CAUTION:
Always use the proper hose when replacing a worn or damaged abrasive hose. The use of a different hose or a hose with a different pressure rating may present a hazard.

Abrasive Hose (cont'd)

Cutting and Reinstalling Abrasive Hose

1. Remove the Handpiece and Hose Assembly by loosening the hose's connector nut with a 3/4" wrench.

2. Pull the connector nut, ground wire and spring back along the hose to a point a few inches beyond where the hose is to be trimmed and cut the tubing. The hose ferrules are crimped to the hose and cannot be removed or slid back. They will need to be replaced with a new ferrule set (ST4209) when re-attaching the hose to the output connector.

   Note: Special attention must be given to cutting the tubing's end straight, flat, and perpendicular (square) to the tubing's centerline. Failure to cut the tube end correctly will cause premature wear of the hose end and connector.

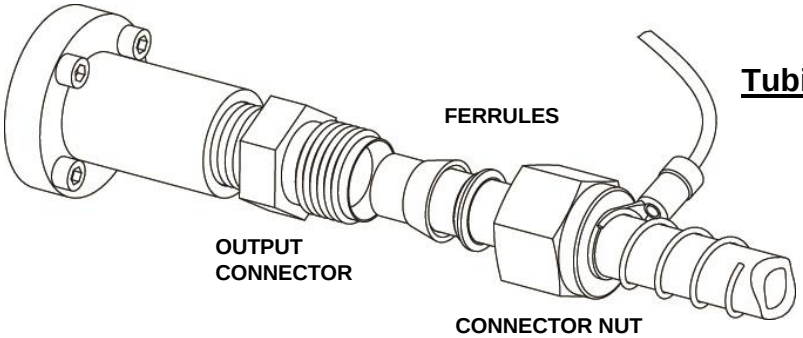

Tubing Ferrule Assembly Fig. 5-1a

4. Slide the nut and new ferrules onto the tubing end as shown in Fig. 5.8.2a

5. Insert the tubing end into the PowderGate's output connector and hold the tubing straight into the fitting with its end firmly seated against the shoulder inside the fitting.

6. Slide the ferrules up to the fitting and thread the nut onto the connector finger tight.

7. Using a 3/4" open-end wrench, tighten the nut onto the fitting approximately 1-¼ turns (beyond finger tight). The gap between the nut and connector hex should be no greater than 1/8".

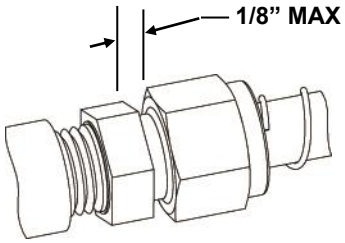

Connector Nut Gap Fig. 5-1b

Handpiece and Abrasive Hose Assembly Replacement.

Refer to Appendix B, Figure 8 for drawing of the Handpiece and Hose Assembly.

The complete handpiece and hose assembly (PF2406) includes the handpiece, handpiece nose, a 7 ft length of polyurethane tubing with the ESD grounding spring wrapped around it, and a connector nut with ferrules. Replace complete assembly by disconnecting at PowderGate output.

The Vent Hose (1/4" Diameter)

Moving the hose through the pinch on a regular basis will greatly extend the life of the hose. However, the vent hose will eventually wear out and need to be replaced. This procedure explains how to replace the vent hose.

CAUTION:
Always use the proper hose when replacing a worn or damaged abrasive hose. The use of a different hose or a hose with a different pressure rating may present a hazard.

Vent Hose Replacement Procedure

1. Turn the power off, depressurize the unit, and unplug the power cord.
2. At the rear panel of the DirectFlo, loosen the hose connector nut from the connector using a 7/16" open-end wrench and remove the hose.
3. Remove and save the rubber grommet from the old hose.
4. Pull the hose through the pinch tube and inspect the pinch tube and plunger as described 5.13.3.
5. Inspect the hose connector for wear, replace if necessary.
6. Feed a 6 ft. length of new hose MB1233 (or the old cut back hose) through the pinch tube. Slip the rubber grommet (ST5010) and the connector nut onto the hose.
7. Work the end of the hose onto the hose connector fitting and tighten the nut onto the connector using a 7/16" open-end wrench. It is only necessary to tighten the nut enough to clamp the hose to the fitting's tube.

Leaks

Small leaks can increase air usage considerably and reduce the efficiency of the DirectFlo. A large drop in pressure while the machine is operating can be an indication of an air leak. Check the supply air inlet hose and the supply regulator for leaks. This is a high-pressure line so small leaks can cause the loss of large volumes of air.

If a leak is suspected within the DirectFlo, switch off the power and remove the cabinet cover according to the directions in the following section. Are there any noticeable powder clouds or unusual powder buildup inside the machine? This is an indication or a leak in the abrasive or vent lines. Check for loose hose connections.

If necessary, switch the power on to re-pressurize the unit. Are there any noticeable or audible leaks? Listen near the tank top, PowderGate, tank vent hose and pressure regulator; or apply a soap solution to these locations and watch for bubbles.

CAUTION: T**here is High Voltage at the Terminal Block!!**

It is very hard to detect a slight leak in the tank cover. If you cannot locate a leak anywhere else, it is probably the tank cover O-rings. See the previous discussion, "**Tank Cover**".

DirectFlo Internal Parts

Accessing parts within the DirectFlo requires removing the protective cover. Follow these directions in order to safely remove the cover.

1. Turn the Power OFF and unplug the unit.

2. Loosen, but do not remove, the four (4) screws that hold the cover in place. Lift the cover off the DirectFlo.

NOTE: If necessary, you may turn on and pressurize the unit with the cover removed. However, be sure that the tank cover and all air hoses are securely in place.

CAUTION:
There is High Voltage at the Terminal Block!!

3. To install the cover, set it in place with the screw slots aligned with screws in chassis.

4. Make sure the lock washers are on the outside surface of the cover. Tighten the screws to hold the cover in place.

Hose Failure at the Vent Pinch

During unit pressurization and depressurization the hose pinch will open and close. This action weakens the hose at the squeeze point and leads to eventual hose failure. Refer to Chapter 4 of this manual, “Maintenance”, for detailed information on reducing this type of failure.

If for some reason the pinch does not close tightly enough to completely seal the hose, a very slight leak can rapidly wear through the hose and cause it to leak. Should this occur, the pinch must be examined and the problem corrected. See: “Repairing the Pinch Valve and Cylinder” below.

Pinch Tube and Plunger

The pinch and plunger are the parts of the pinch assembly that make contact with the hose. Hoses can sometimes develop leaks at the point where they are pinched. Leakage of abrasive at these points can cut into the pinch tube and plunger causing sharp edges that damage hoses. Inspect the pinch and plunger on a regular basis (see Table 4-1, “Maintenance Intervals”) for pitting and sharp edges. Abnormal hose breakage, always at the pinch, is an indication of pinch or plunger damage.

Vent Pinch Tube and Plunger Inspection

1. Turn off and unplug the DirectFlo.

2. Use a 7/16” wrench to remove the connector nut on the vent hose fitting on the rear panel. Remove the hose and pull it through the pinch tube.

3. Remove the pinch tube. Inspect it for sharp edges or pitting due to abrasive leakage. Replace if necessary with Comco part number MB1282.

4. Inspect the pinch plunger for sharp edges or pitting due to abrasive leakage. Replace if necessary with Comco part number MB1050-2.

5. Inspect the piston rod by pulling it out about 1/2”. It should be clean, dry (not oily), and not “gritty”. Wipe thoroughly. The rod should retract easily when released.

6. Install the pinch tube. The pinch tube should be hand tightened all the way onto the cylinder and then backed off about 1/4 turn until the hole is horizontal.

7. Install the hose - see procedure, above.

Replacing the Vent Pinch Assembly (refer to Appendix B, Figure 9)

Prior to replacing the assembly check for proper pinch cylinder operation by performing the “Set-up and Test Procedure” in Chapter 2 beginning with step 14. If any problems are encountered, verify at least 80 psi is supplied to the cylinder from the air source when the unit is turned ON. And the pressure to the cylinder drops to 0 psi when the unit is turned OFF.

If the vent hose pinch will not close to stop the flow of air, or open to allow the venting of the DirectFlo, the pinch assembly will need to be replaced. Follow the procedure below, “Vent Pinch Assembly Replacement”.

Vent Pinch Assembly Replacement Procedure (PF2445)

1. Turn off and unplug the DirectFlo.

2. Remove the tank enclosure gasket and cabinet cover. See instructions above.

3. If not already removed, remove the pinch tube from the pinch.

4. Disconnect the air hose from the rear of the cylinder.

5. With a 7/8” wrench remove the cylinder mounting nut. Pull cylinder out from inside the unit.

6. Reverse procedure to install new cylinder assembly (PF2445).

7. Replace the cover.

Inspecting and Repairing the PowderGate

The PowderGate is a control valve for turning ON and OFF the abrasive flow to the nozzle. The PowderGate has been designed for minimal maintenance. However over time the polymer nosepiece will wear and require replacement. If leakage through the nose tip is observed when the PowderGate is in the closed position then replacement of the nosepiece is required. If after replacing the Nosepiece the PowderGate continues to leak through the nozzle, then the carbide seat in the Nose & Valve Seat Assembly is excessively worn.

Replacing the Polymer Nosepiece or Nose & Valve Seat Assembly:

You do not have to remove the PowderGate Assembly from the Blaster to replace a worn nosepiece.

1. Turn power OFF, vent pressure from tank and disconnect air supply from unit.

2. Reaching through the large hole in the blasters back panel with a 3/32" hex T-wrench, remove the 4 socket head cap screws, Nose & Valve Seat Assembly and its O-ring.

3. Remove the blue polymer nosepiece from the end of the Piston Rod by gently wiggling it back and forth and pulling it out toward you with a pair of pliers. The nosepiece is retained on the end of the piston rod by a barb.

4. Install the new nosepiece by pushing it onto the barbed tip of the Piston Rod. Be sure the nosepiece is seated straight and against the shoulder of the Piston Rod.

5. Inspect the carbide seat inside the Nose & Valve Seat Assembly. It shows noticeable wear then it should be replaced. The seat is bonded into the Nose and is replaced with the nose as a complete assembly.

6. Replace the Nose & Valve Seat Assembly. Secure in place with the 4 socket head cap screws.

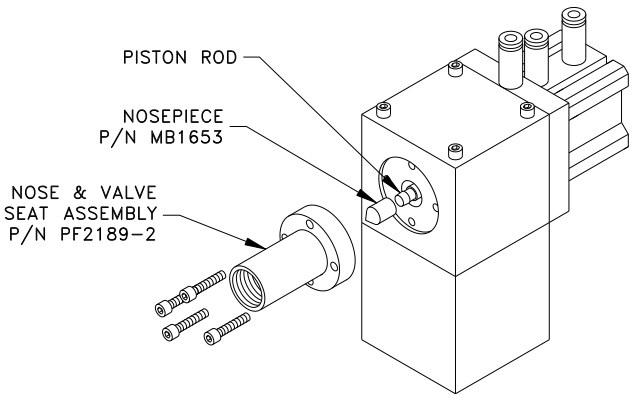

Figure 5-2:
PowderGate Nosepiece and Nose & Valve Seat Replacement

Inspecting and Repairing the PowderGate (cont'd)

Removing and Disassembling the PowderGate. (Ref Appendix B, Figure 10)

1. Remove the valve seat assembly as described above.

2. Disconnect the 3 air lines connected to the PowderGate. It is suggested that these lines be labeled for easy identification during re-installation.

3. Remove the 4 socket head screws located on the top of the PowderGate and lift the assembly up and out of the machine.

4. To disassemble the PowderGate. Remove the 4 socket head cap screws located at the rear of the cylinder. The PowderGate should now be able to be pulled apart.

5. Inspect all of the internal parts for excessive wear and look for any noticeable amounts of abrasive leaking past the felt wipers and collecting around cylinder shaft where it enters the cylinder. The felt wipers are a normal wear item. It is a good practice to replace them whenever the unit is disassembled for normal inspection and maintenance.

6. Test the cylinder for free and smooth piston movement. The piston on the air cylinder assembly can become eroded from the abrasive flow and should be paid special attention when inspecting internal parts. The piston is part of the cylinder assembly and is replaced as a complete unit.

7. Reassemble and install the PowderGate by reversing the above steps.

8. Be sure the O-ring is in the PowderGate base prior to installing the assembly into the machine.

PowderGate Delay Adjustment

The PowderGate's control valve air source is equipped with a delay valve (flow control), at the regulator to prevent it from opening for 45 - 60 seconds after internal pressure is released. This allows the tank pressure to escape through the vent hose, rather than the nozzle. This flow control is set at the factory and should not require and further adjustment. However, if the PowderGate opens too quickly when depressurizing, or fails to open, the flow control adjustment can be checked. The delay valve has a locking ring and an adjustment knob. Loosen the locking ring by turning counterclockwise then adjust the delay valve with the knob by turning it fully clockwise until it stops. Turn knob back out counterclockwise 1/4 to 1/2 turn. Tighten the locking ring in place. If the delay cannot be properly set, it will be necessary to replace the flow control valve.

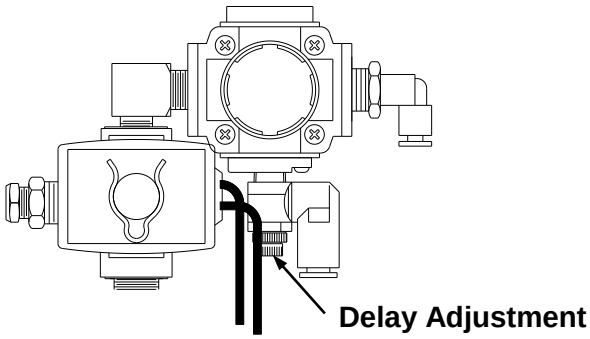

Inspecting and Repairing the Modulator (refer to Figure 5-3)

Proceed as far as necessary according to the problem.

1. Turn the power OFF and unplug the unit.

2. Remove the tank lid and the powder basket from the tank.

3. Remove the cabinet cover. See instructions above.

4. Detach the air hose from the modulator.

5. Using a 3/4" open-end wrench, remove the coil retaining coupler from the modulator housing. Slide the coil and 1" washer off the modulator housing. **Save the washer**.

6. With a 7/16" open-end wrench across the two flats of the modulator nose, remove the modulator nose from the stainless steel body.

7. Examine the polyurethane seat cemented on the modulator nose. It should be smooth and unmarked except for a faint ring (impression) matching the ring seat on the core.

8. Tip the DirectFlo onto its left side and allow the core to slide out. Note the core's orientation, the cross-holes must be nearest the tank.

9. Examine the edges and ring seat of the core. They must be smooth and even. If it has any scratches or roughness that can be felt with a fingernail replace the entire Modulator Housing Assembly PF2040. If neither the nose seat nor the core is worn, reassemble the modulator housing assembly and skip to step 13.

Note: Make sure the core is inserted properly into the housing. The cross-holes must be nearest the tank.

10. Using a 5/8" open-end wrench remove the modulator housing from the tank. Access the housing through the opening in the bottom of the chassis.

11. Use a vacuum to remove any residual powder from inside the tank-mixing chamber (at the modulator connection).

12. Make sure threads are clean and abrasive free. Install the new Modulator Housing Assembly (PF2040) to the tank.

13. Slide the 1" washer over the modulator housing and then slide the modulator coil over the modulator housing.

14. Replace the retaining coupler.

15. Install the air hose.

16. Replace the DirectFlo cover and install the tank cover.

Figure 5-3:
Modulator Assembly and Modulator Housing Assembly

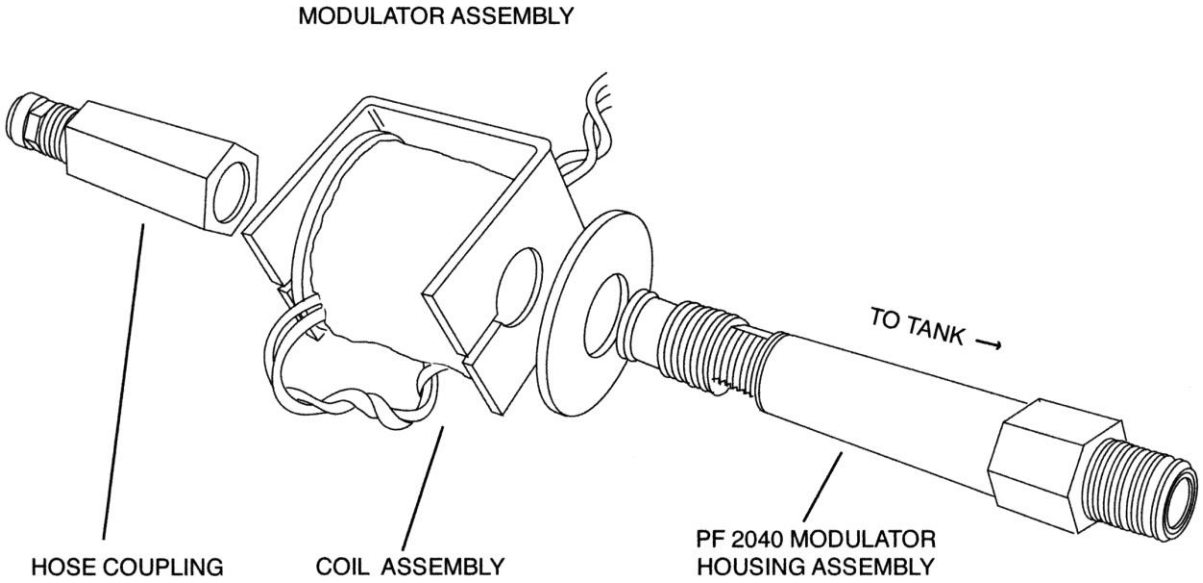

See illustration below

PF2040 Modulator Housing Assembly, part of Modulator Assembly above

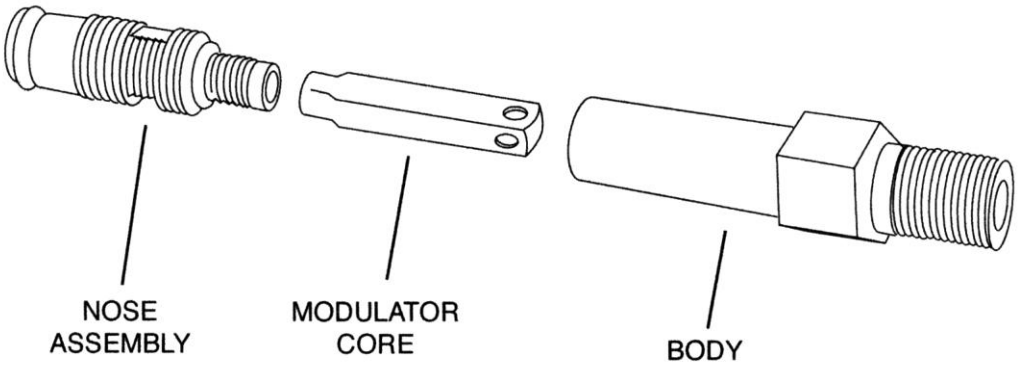

Air Pressure Regulator Assembly

The Air Pressure regulator adjusts the source air pressure down to a useful blasting pressure as indicated by the gage. The regulator assembly contains the regulator, check valve, filter and hose fittings. Refer to Appendix B, Figure 11.

Indications of a regulator failure:

a) Gage goes to “Max” at idle but drops drastically when blasting.

b) Regulator knob will not turn in either direction.

c) Regulator knob turns freely, but never tops or bottoms out (no high or low stop).

Replace the Regulator Assembly according to the following procedure:

Air Pressure Regulator Assembly Replacement Procedure

1. Turn Power OFF and depressurize unit.
2. Remove the DirectFlo cover (4 screws).
3. Disconnect the hoses from the regulator assembly. You may want to label each air hose before removing.
4. Remove the retaining nut from the front of the regulator.
5. Remove the cap from the knob by squeezing the sides of the cap and pop it off (similar to removing a child-proof cap from a pill bottle). You will need to do the same with the new regulator.
6. Pull the regulator assembly back into chassis and remove.
7. Install the new regulator (PF2443).
8. Attach the air hoses to the regulator assembly.
9. Install the cover.

THIS PAGE LEFT INTENTIONALLY BLANK

Chapter 6: Optional Equipment and Manual Supplements

In This Chapter

- Optional equipment available on your DirectFlo
- Operation and service of these options

Splitters can be integrated with the DirectFlo to supply abrasive to multiple nozzles. Additional information on splitters and multiple nozzle arrays is available in Chapter 3, page 11.

PF2121-3 SPLITTER PARTS AND INSTALLATION

3/8" OD Tube Input - (2) 1/4" OD Tube Output

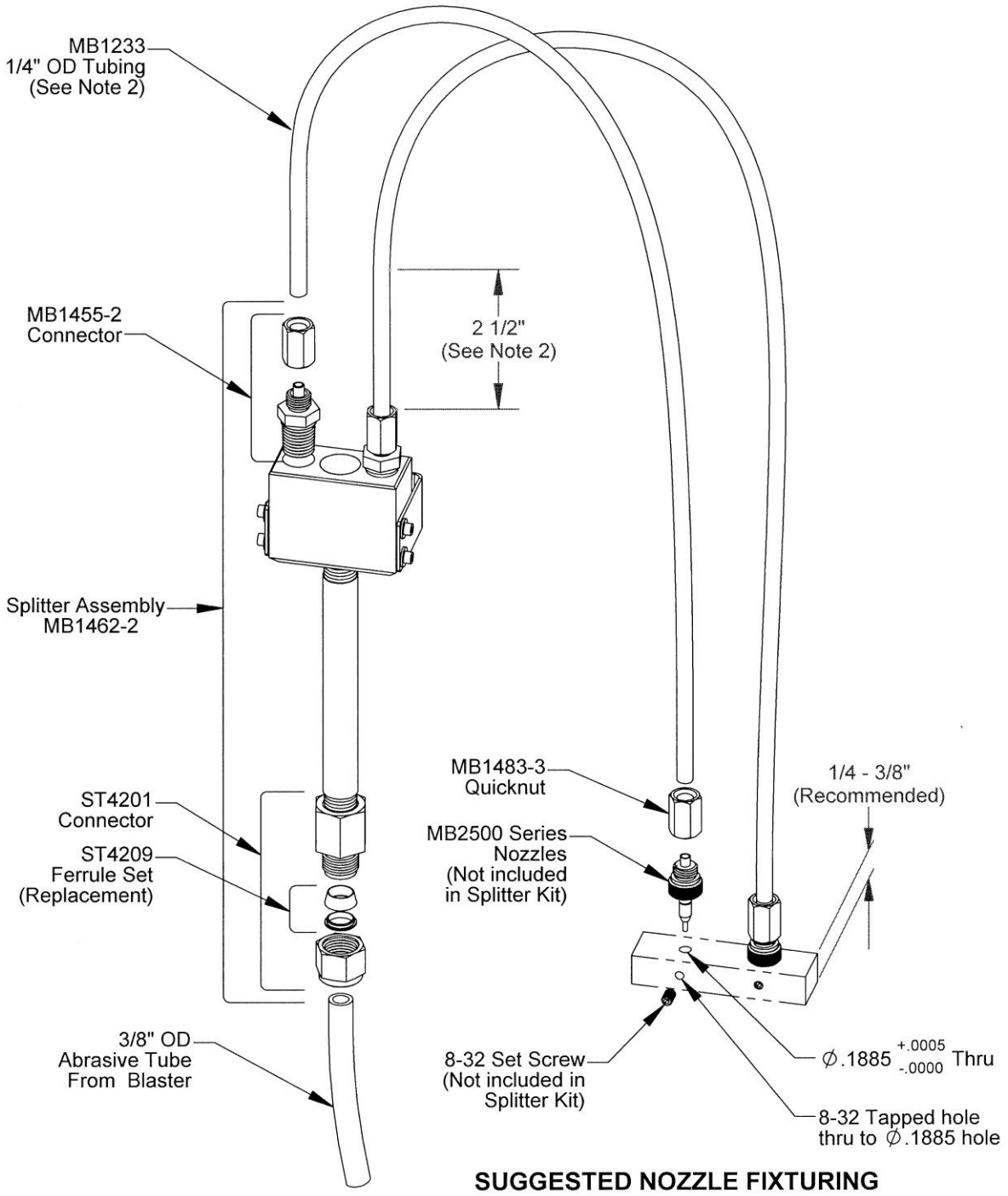

SUGGESTED NOZZLE FIXTURING

INSTALLATION NOTES:

1) Install the splitter vertically with the output hoses pointing up as shown.
2) The output hoses must be kept straight at the exit of the splitter for a minimum of 2 1/2" and should be cut to equal lengths.
3) All of the nozzles must be the same size and style for equal splitting of the abrasive flow and minimum splitter wear.

Rev 07/15

PF2121-4 SPLITTER PARTS AND INSTALLATION

3/8" OD Tube Input - (2) 3/8" OD Tube Output

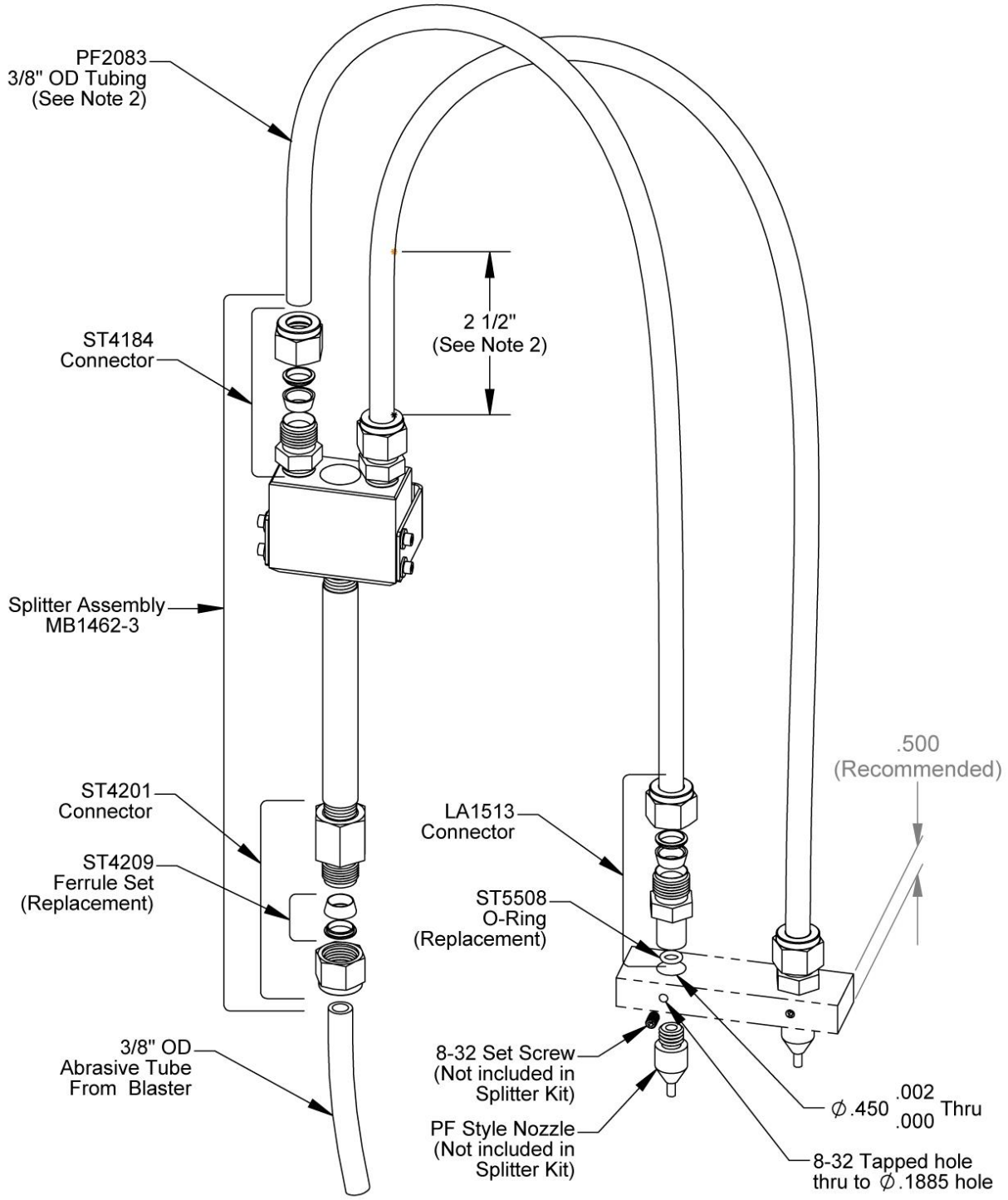

SUGGESTED NOZZLE FIXTURING

INSTALLATION NOTES:

1) Install the splitter vertically with the output hoses pointing up as shown.
2) The output hoses must be kept straight at the exit of the splitter for a minimum of 2 1/2" and should be cut to equal lengths.
3) All of the nozzles must be the same size and style for equal splitting of the abrasive flow and mimimum splitter wear.

SPLITTER PARTS AND INSTALLATION

PF2131-3 3/8" OD Tube Input - (3) 1/4" OD Tube Output (Shown)
PF2215 3/8" OD Tube Input - (5) 1/4" OD Tube Output

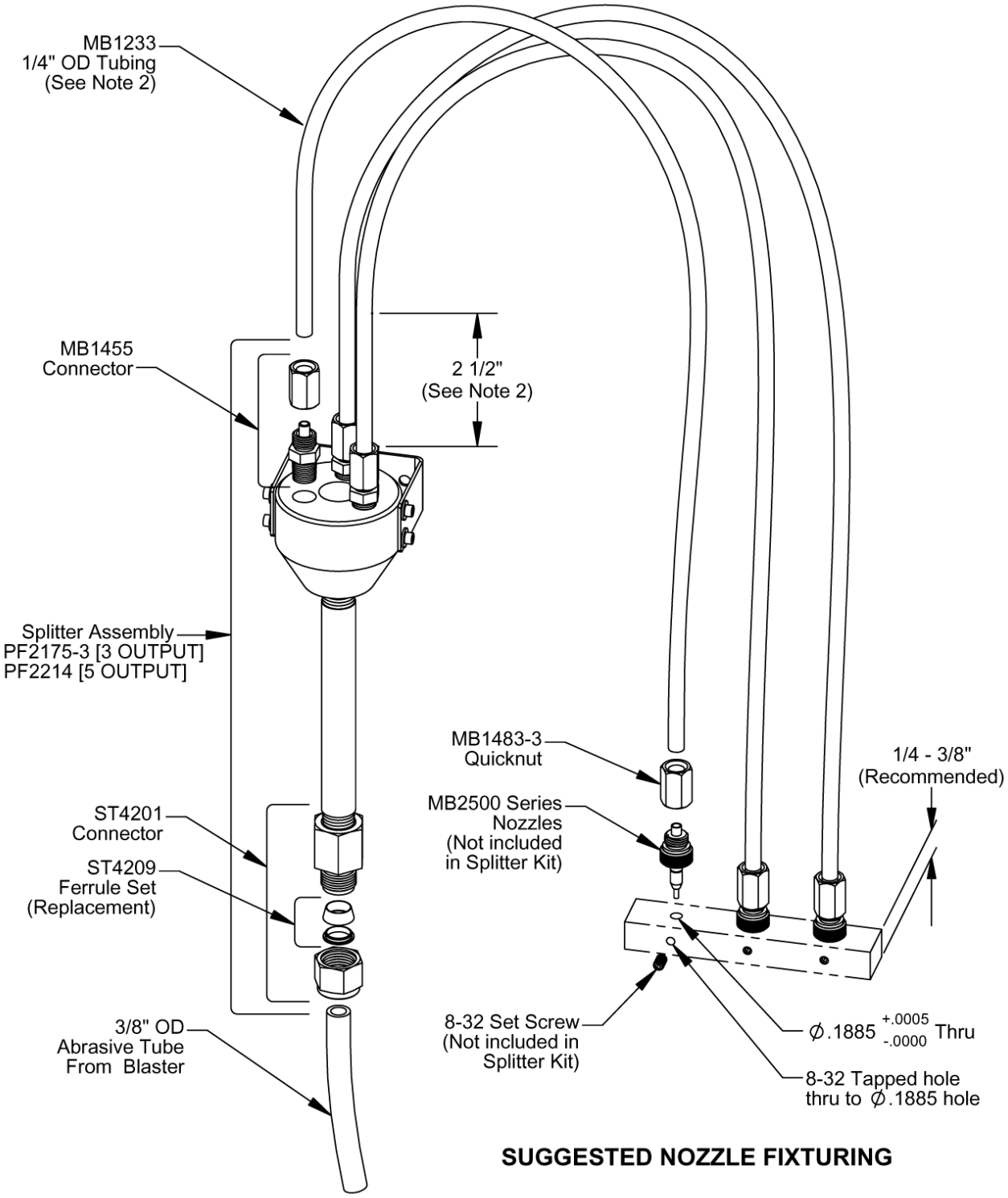

SUGGESTED NOZZLE FIXTURING

INSTALLATION NOTES:

1) Install the splitter vertically with the output hoses pointing up as shown.
2) The output hoses must be kept straight at the exit of the splitter for a minimum of 2 1/2" and should be cut to equal lengths.
3) All of the nozzles must be the same size and style for equal splitting of the abrasive flow and minimum splitter wear.

Rev 07/15

PF2141-3 SPLITTER PARTS AND INSTALLATION

3/8" OD Tube Input - (4) 1/4" OD Tube Output

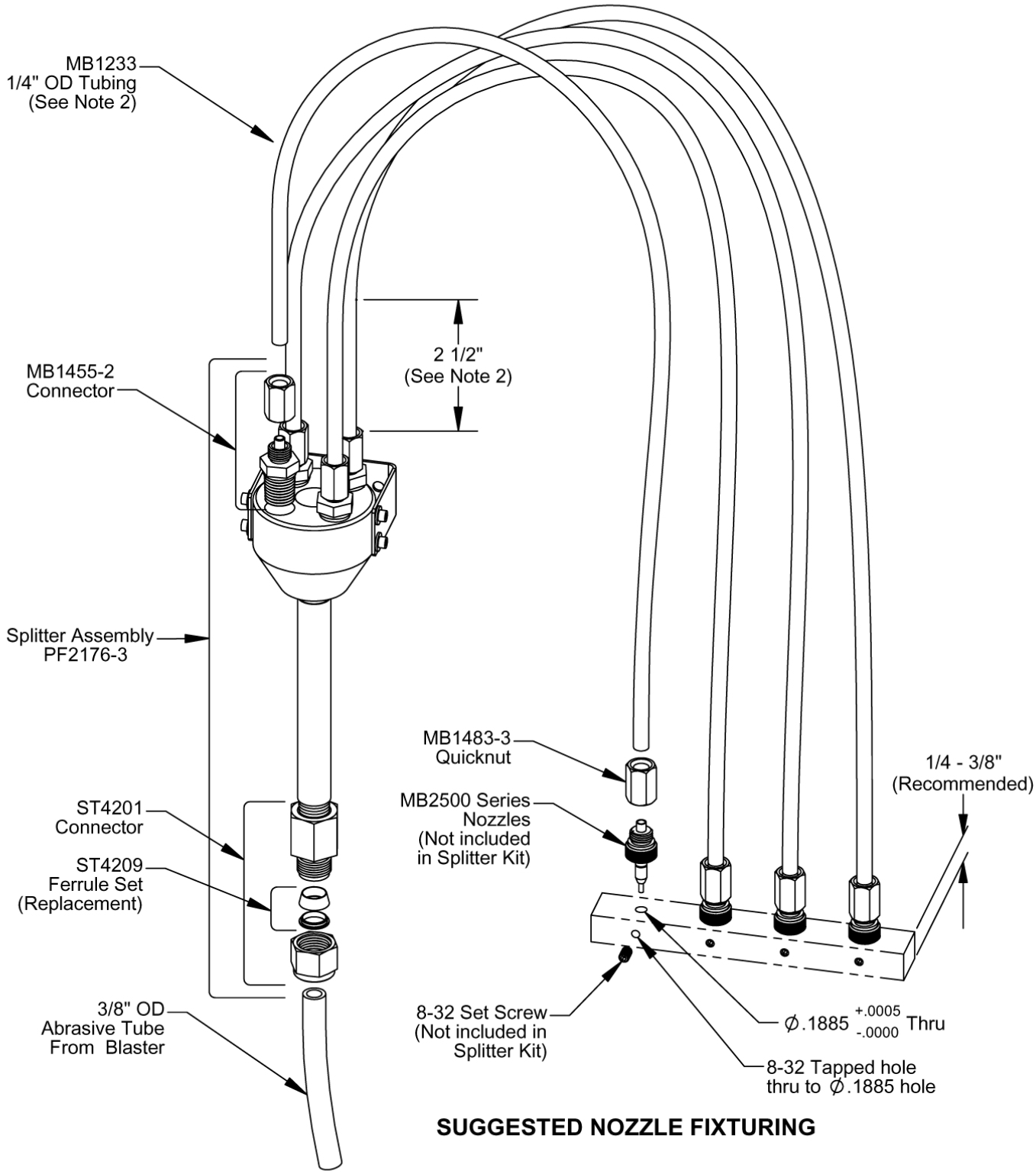

SUGGESTED NOZZLE FIXTURING

INSTALLATION NOTES:

1) Install the splitter vertically with the output hoses pointing up as shown.
2) The output hoses must be kept straight at the exit of the splitter for a minimum of 2 1/2" and should be cut to equal lengths.
3) All of the nozzles must be the same size and style for equal splitting of the abrasive flow and minimum splitter wear.

PF2495 CONSTANT AIR BLEED (OPTIONAL)
Figure 6.2

PNEUMATIC DIAGRAM

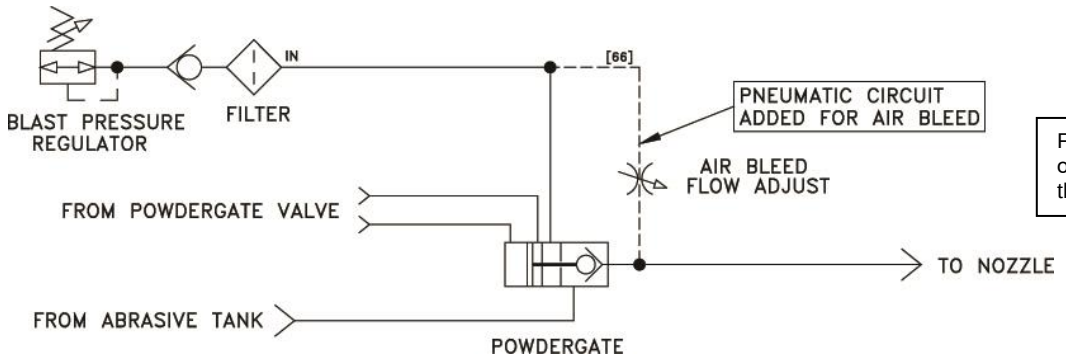

For a complete Pneumatic Diagram of the blaster see Appendix "B" of this manual.

PARTS DRAWING

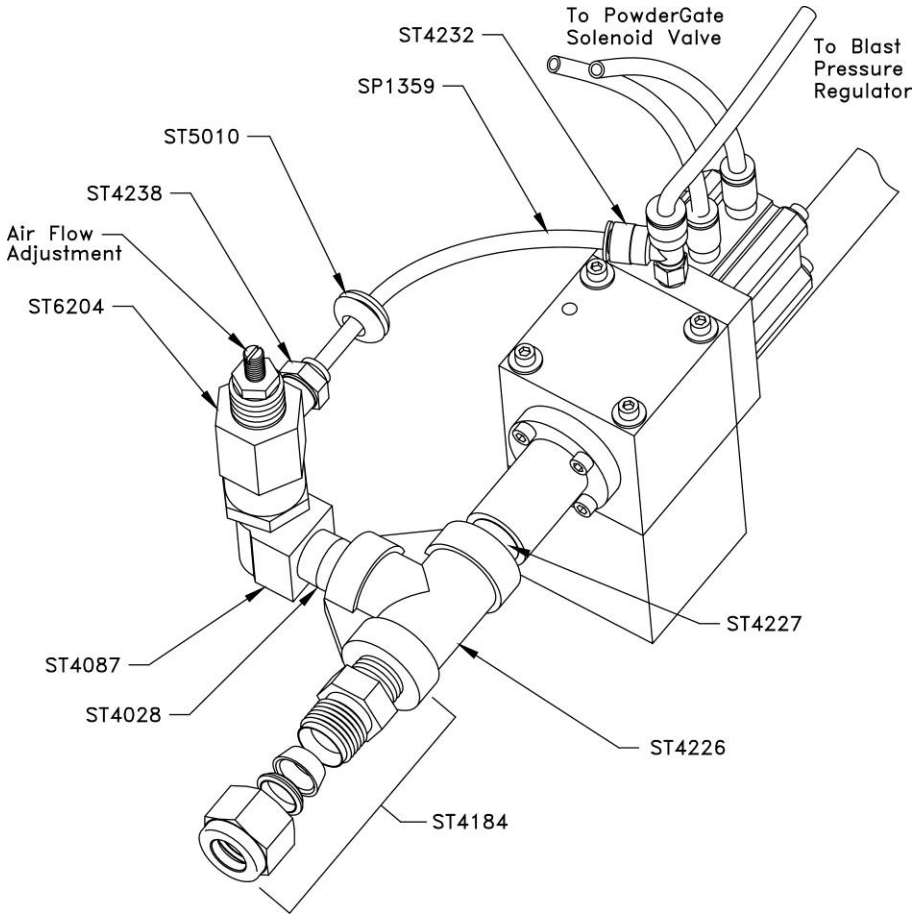

ST4184	Connector, S.S., 3/8 T x 1/4 NPT	ST4227	Nipple 1/4 NPT Stainless Steel
SP1359	Tubing, Poly, 5/32 OD Clear	ST4232	Tee, Male Run, 5/32 T x 10-32
ST4028	Nipple, 1/4 NPT, Brass	ST4238	Connector, 5/32 T x 1/8 NPT
ST4087	Elbow, Street 1/8 NPT	ST5010	Grommet
ST4226	Tee, 1/4 NPT Stainless Steel	ST6204	Needle Valve

Rev 04/10

Air Flow Adjustment

The air flow adjustment located on the PowderGate output sets the bleed air flow out of the abrasive nozzle when the blaster is pressurized but not blasting. The adjustment is set at the factory to flow 20 SCFH at 100 psi (560 SLH / 700 kPa). The flow can be increased or decreased if desired.

To set the bleed air flow:

1) Loosen the lock nut on the threaded adjusting shaft protruding from the Flow Control.

2) Set flow by inserting a screwdriver into the end of the adjusting shaft and turn counterclockwise to increase or clockwise to decrease flow. If a flow meter is available, it can be connected to the nozzle end of the abrasive hose to assist in achieving the desired flow.

   DO NOT TURN ON BLAST WHILE SETTING FLOW.

3) After setting the air flow, lock down the adjusting screw with the lock nut.

Service

If the bleed air fails to flow out of the nozzle, service may be necessary.

1) Check the nozzle to make sure it is not clogged. Does abrasive flow when the blast is on?

2) Adjust for proper air flow as detailed above.

3) Flow Control valve may be clogged with abrasive powder. Flush out valve by turning up the bleed air flow to its maximum and allow the bleed air to flow for 15 to 20 seconds. Removing or disconnecting the nozzle(s) from the abrasive hose will increase the flushing air flow.

   DO NOT TURN ON BLAST WHILE FLUSHING BLEED HOSES.

   After flushing, reset bleed air to its normal operating flow as detailed above.

4) If the bleed air still does not flow, it is likely caused by an obstruction in the bleed air path such as a clogged filter, check valve, or regulator port. Locate clog by disconnecting or removing components one at a time and checking for air flow.

THIS PAGE LEFT INTENTIONALLY BLANK

Appendix A

Parts Lists

for the

DirectFlo DF1400

MAJOR ASSEMBLIES AND PRINCIPAL PARTS

PART NUMBER	DESCRIPTION	QTY.
PF1407 [1]	Valve Assy, PowderGate, 115VAC	1
● ST6263	Muffler, 10-32 Thd	2
● ST4198	Elbow, Male, 1/4T, 10-32 Thd	1
● ST4222	Elbow, Male, 5/32T, 10-32 Thd	2
● ST6265 [2]	Valve, 4 Way, 110VDC	1
PF1409 [a]	Tank Assembly	1
● PF2027	Bracket, Bolt	4
● PF2079	Swing, Bolt, Cover	4
● ST1270	Washer, Hardened	4
● ST1289	Nut, Hex, 5/16-18	4
● ST4029	Coupling, 1/8P, Brs	1
● ST4265-2	Conn. Body, 3/8 T, 1/8 FNPT, SS	1
● MB1455	Conn. W/Quicknut, 1/8-NPT x 1/4P	1
● ST4184-2	Conn. Body, 3/8 T, 1/4 NPT, SS	1
● ST5163-6	Pin, Dowel, 1/4 X 1 1/4	4
● PF2429-3[b]	Bypass Tube Assy, DF Std Tank	1
PF2445	Vent Pinch Assy.	1
● MB1050-2	Plunger, Pinch	1
● MB1282	Tube, Pinch	1
PF1404 [3]	Inlet Valve, Assy.	1
● ST6208-3 [4]	Valve, Sol 2-Way, 3/8P, 115VAC	1
● ST4146	Plug, Quick-Disconnect Coupling	1
● ST6245-3 [5]	Valve, Sol 3-Way, 2.2mm	1
● ST6246-2	Regulator, 1/4, 0-140 psi	1
● ST6256	Valve, Flow Control	1
PF2480	Cover Assy, Tank	1
● MB1145	Flapper Assembly	1
● ST5023	O-ring, 2-224	1
● ST5495	O-ring, 5.859ID x.139W	1
● ST5496	O-ring, .2961ID x.139W	1
● PF2055	Bushing, Feed Thru	4

[a] Extended Tank Model requires Tank P/N PF1406.
[b] Extended Tanks require a PF2498-4 Bypass Tube Assembly

[1] 230 VAC PowderGate Valve Assembly is PF1407-2
[2] 230 VAC Valve, 4-Way is ST6265-2
[3] 230 VAC Inlet Valve Assembly is PF1404-2
[4] 230 VAC Valve, 2-Way is ST6208-4
[5] 230 VAC Valve, 3-Way is ST6245-4

MAJOR ASSEMBLIES AND PRINCIPAL PARTS (cont'd)

PART NUMBER	DESCRIPTION	QTY.
PF2450	PowderGate Assembly	1
● PF2189-2	Nose & Valve Seat Assembly	1
● MB1653	Nosepiece, Polymer	1
● PF2471	Air Cylinder Assy	1
● PF2441	Disk, Retainer	1
● PF2442	Wiper, Felt	2
● ST4184-2	Conn. Body, 3/8 T, 1/4 MPT, SS	1
● ST6257	Cylinder	1
● ST4172	Fitting, 5/32 Tube, 10-32 Thd	3
● ST5161	O-ring, .489 ID x .070 W	1
● ST5546	O-ring, .801 ID x .070 W	1
● ST5031	O-ring, .739 ID x .070 W	1
● ST5067	O-ring, .614 ID x .070 W	1
PF2034 [1]	Modulator, Assy, 115V	1
● PF2040	Housing, Modulator, Assy	1
▸ MB1294	Core, Modulator	1
▸ PF2199	Body, Modulator DF/PF	1
▸ PF2050	Nose Assy, Modulator	1
● PF2042	Coupler, Modulator	1
● MB1310-7 [2]	Coil, Modulator, 115V	1
PF2443	Regulator Assy, Main	1
● PF2472	Regulator, 3/8NPT	1
● PF2210	Filter Assembly	1
● ST6209	Valve, Check	1
● MB1560	Filter & Check Valve Assy.	1
PF2142	Powder, Adj. Assy, High Flow	1
● PF2148	Valve, Needle, RFC 1/4-P	1
● ST6209	Valve, Check, .250P	1
● ST6232	Filter, In Line 1/2" 20 Micron	1
PF2406	Handpiece & Hose Assembly	1
● PF2066	Tube, Handpiece	1
● PF2090	Nose Assembly	1
● PF2083	Tube, Abrasive, .375 Polyhose	6 ft
● ST4266	Nut & Ferrule Set, 3/8 Tubing	1
● ST4209	Ferrule Set (only) 3/8 Tubing	1
● ST5552	Spring, Grounding	1

[1] 230V Modulator Assembly is PF2034-2
[2] 230V Coil, Modulator is MB1310-8

MAJOR ASSEMBLIES AND PRINCIPAL PARTS (cont'd)

PF2227-1 [1]	Basket Assy, Abrasive	1
● MB1409-25	Orifice, Tank, .025	1
● ST5504	O-ring, .359ID x.139W	1
● ST5520 [2]	Knob, Blk, Plastic, 1/4" Bushing	1
● ST2045 [2]	Switch, Rocker, Power	1
● MB1233 [3]	Tube, Abrasive, Poly, Blu	6 ft
● ST4012 [3]	Tube, .250x.040, Nylotube	2 ft
● ST4040 [3]	Tube, .375x.050, Polyflo, Blk	50"
● SP1359 [3]	Tube, Poly, 5/32 OD, Clear	6 ft
● ST7002 [3]	Diode	1
● PF2447 [3]	Gasket, Tank	1
● PF1290 [4] [7]	Terminal Block	1
● ST2005-005 [4] [6]	Fuse, 220V, 1A, Time Delay	1
● PF2402	Cover, Chassis	1
● ST2164-1 [4]	Recept., Conn., 4 Pin, Sq. Flange	1
● ST2130-2 [4]	Power Inlet, AC, IE320	1
● PF2414	Footswitch w/cable	1
● ST7716-1 [4] [5]	Power Cord	1
● ST7039-124	Resistor, 120K, 1/2W, 5%	1
● ST4014 [4]	Union, Blkhd, .250Tx.250T, Brs	1
● MB1483 [4]	Quicknut, 1/4 Poly Tubing	2

▸ For reference only, parts not sold individually

[1] Extended Tank Model requires Powder Basket PF2227-2

[2] Part of Front Panel Assembly, PF1439

[3] Part of Machine Assembly, PF1420

[4] Part of Cabinet Assembly, PF1422

[5] Power Cord for 230V machines is P/N ST7716-2

[6] Fuses for 230V machines:

ST2005-005	Fuse, 220V, 500mA, Time Delay	1
ST2005-0315	Fuse, 220V, 3.15A, Time Delay	1

[7] 230 VAC Terminal Block is PF1490

STANDARD ACCESSORY PARTS, PF1408-1 [1]

PART NUMBER	DESCRIPTION	QTY.
MB1409-30	Orifice, Tank, .030	1
PF2044	Nozzle adaptor	1
PF2414	Footswitch	1
PF2083	Tube, Abrasive, Poly	12 ft
PF2110-1	Nozzle. 0.060, red	1
PF2110-3	Nozzle. 0.080, red	1
PF2120	Sleeve, Tube	3
ST5066	Funnel, Abrasive	1
ST5114	Nut driver, 1/4	1
ST7716-1*	Power cord	1
ST5508	O-ring, nozzle	5
ST5518	Wrench, 9/16	1
ST4209	Ferrule Set, 3/8 Tubing	2
PF2090	Nose Assembly, Nozzle	1
MB1653	Nosepiece, PowderGate	1

[1] The Accessory Parts kit for 230v machines is PF1408-2CE; Power cord is ST7716-9, and two fuses are added, ST2005-005 (500ma) and ST2005-0315 (3.15a).

RECOMMENDED SPARE PARTS (Optional)

PART NUMBER	DESCRIPTION	QTY.
MB1409-x*	Orifice, Tank, Carbide	2
MB1653	Nosepiece, PowderGate	2
PF2189-2	Nose/Valve Seat Assembly	1
PF2040	Housing Assy, Modulator	2
PF2079	Swing Bolt, Cover	2
PF2083	Tube, Abrasive, .375 Polyhose	30 ft.
PF2090	Nose Assy, Nozzle	2
PF2120	Sleeve, Tube	24
ST2005-005	Fuse, 220V, 500mA	1
ST2005-0315	Fuse, 220V, 3.15A	1
ST1289	Nut, Hex, for Cover Bolts	4
ST4014	Union, Blkhd	1
ST4184	Connector, 3/8 Tubing X 1/4 NPT, SS	1
ST4209	Ferrule Set, 3/8 Tubing	5
ST4159	Nut, Tube .375	2
PF2139	O-ring Replacement Kit	1
ST5161	O-ring, .489 ID	1
ST6209	Valve, Check	1
ST6210	Regulator	1
ST6267	Filter Element, Replacement	1

***** Orifice and Nozzle sizes are determined by application requirements. Refer to Chapter 3 for details.

Rev 07/12

Appendix B

Drawings and Schematics

for the

DirectFlo DF1400

List of Figures

FIGURE 1: FRONT VIEW, MODEL DF1400

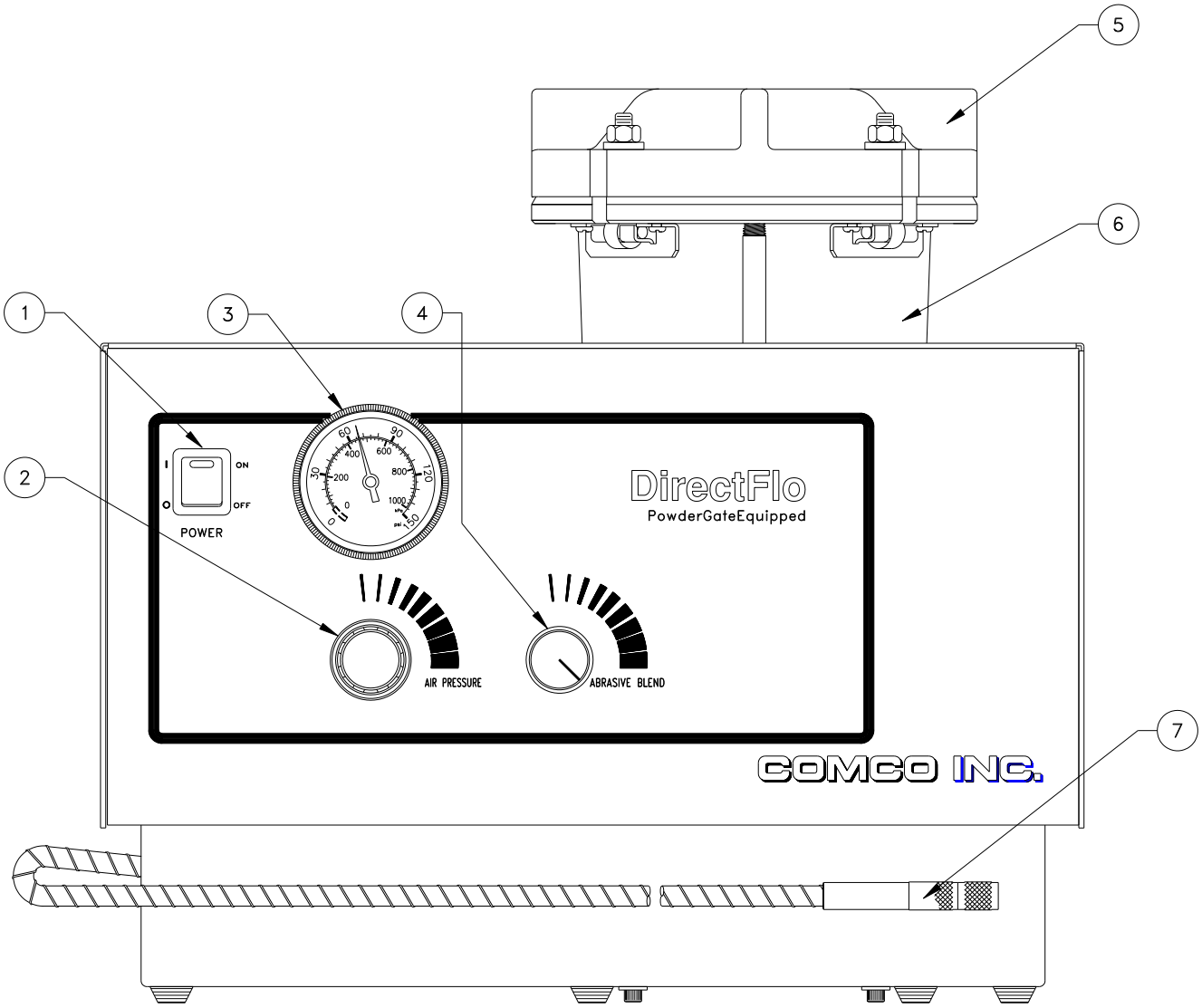

Item No.	Description	Part No.	Item No.	Description	Part No.
1	Power Switch	ST2045	5	Tank Cover	PF2480
2	Regulator Assy.	PF2443	6	Abrasive Tank	**[1]**
3	Pressure Gage	MB1407-1	7	Handpiece Assy.	PF2406
4	Powder Flow Ctl.	PF2142			

[1] See individual Part Drawing for Part Numbers

FIGURE 2: TOP VIEW, MODEL DF1400

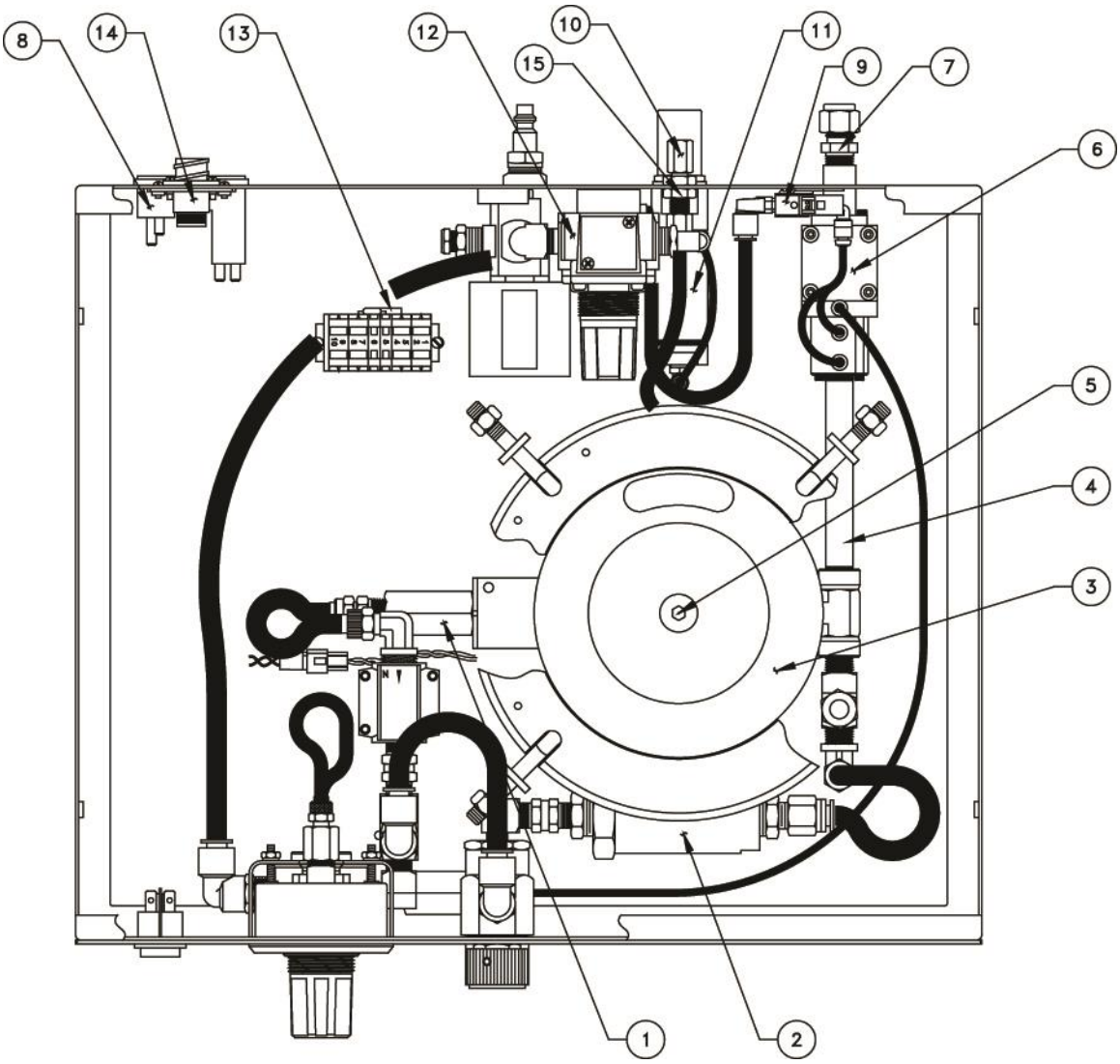

Item No.	Description	Part No.	Item No.	Description	Part No.
1	Modulator Assy.	PF2034 [2]	8	Conn. Body, 3/8x1/4 NPT	ST4184-2
2	Powder Adj. Assy	PF2142	9	Solenoid Valve Assy	PF1407
3	Abrasive Basket	**[1]**	10	Quicknut	MB1483
4	Nipple, 1/4-NPTX6.0	ST4223	11	Vent Pinch Assy	PF2445
5	Tank Orifice	MB1409-X [*]	12	Inlet Valve Assy	PF1404 [3]
6	PowderGate Assy	PF2450	13	Terminal Block	PF1290 [4]
7	Conn., 3/8T, 1/4 NPT	ST4184	14	Receptacle SQ	ST2164-1
8	Power Inlet	ST2130-2	15	Union, Bulkhead, 1/4 T	ST4014

[*] Tank Orifice Size, determined by application
[1] See individual Part Drawing for Part Numbers
[2] 230V Modulator Assembly is PF2034-2
[3] 230 VAC Inlet Valve Assembly is PF1404-2
[4] 230V Terminal Block is PF1490

FIGURE 3: PNEUMATIC SCHEMATIC, MODEL DF1400

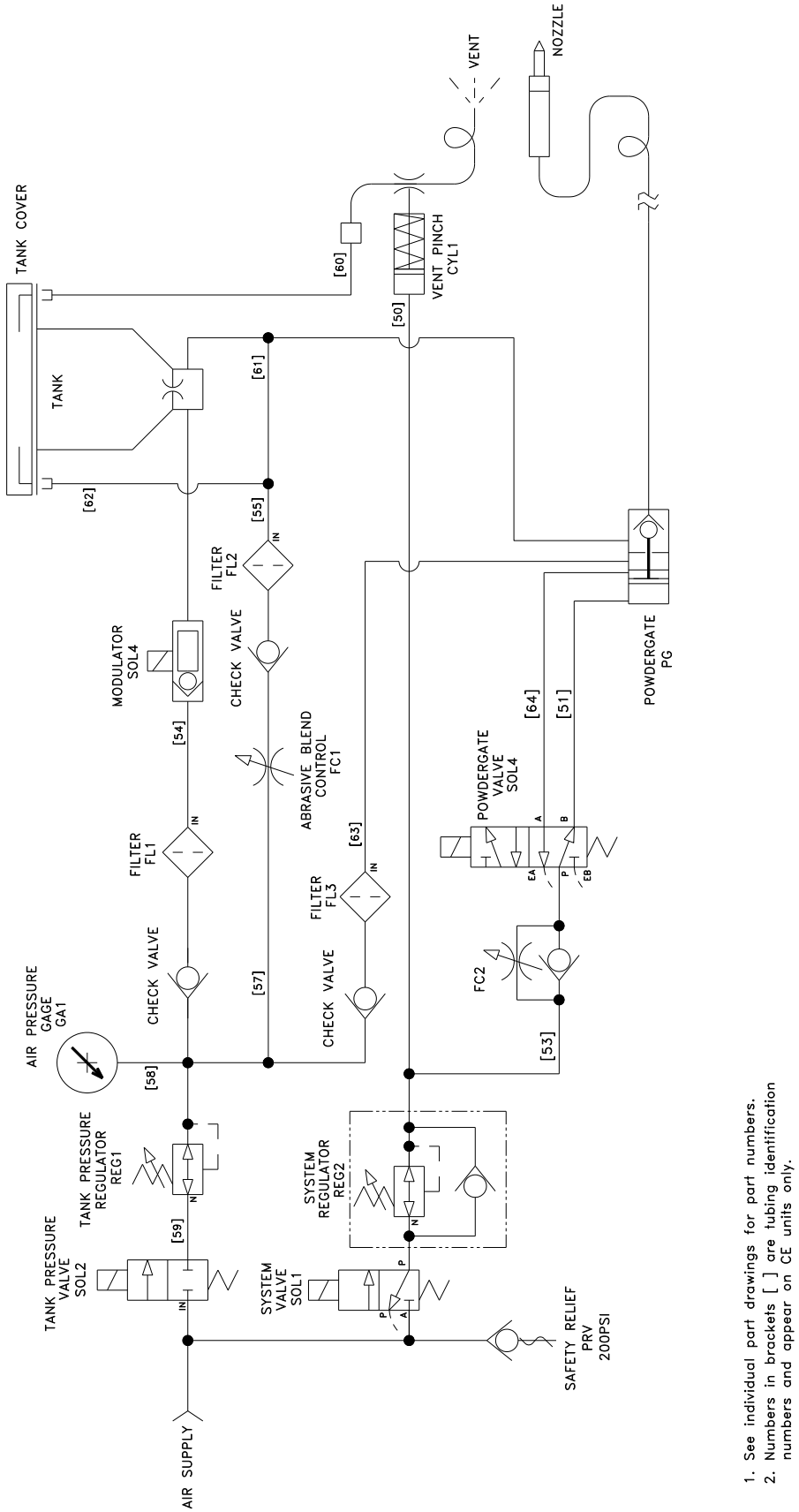

1. See individual part drawings for part numbers.
2. Numbers in brackets [ ] are tubing identification numbers and appear on CE units only.

FIGURE 4A: ELECTRICAL SCHEMATIC, MODEL DF1400

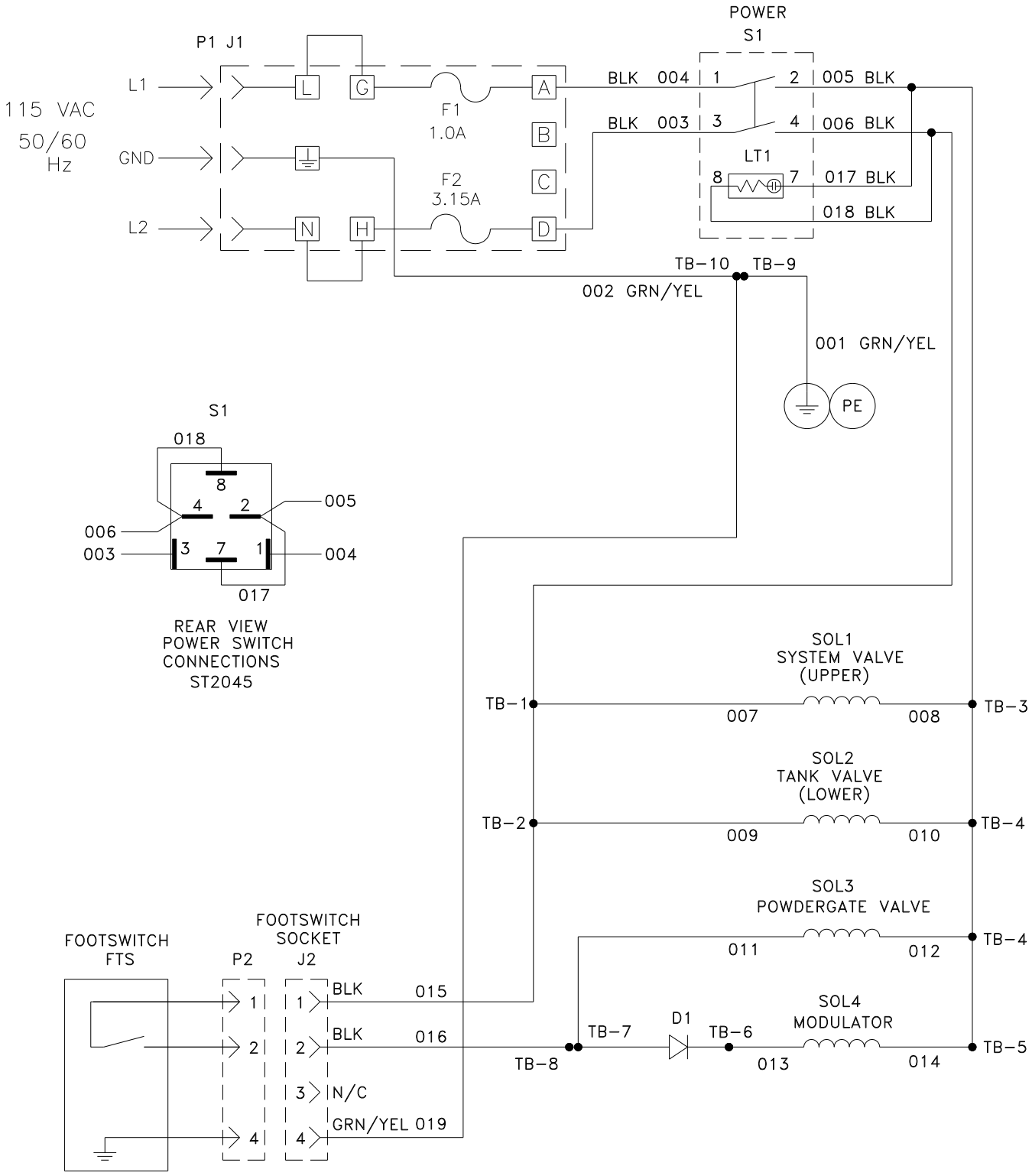

FIGURE 4B: ELECTRICAL SCHEMATIC, MODEL DF1400-2

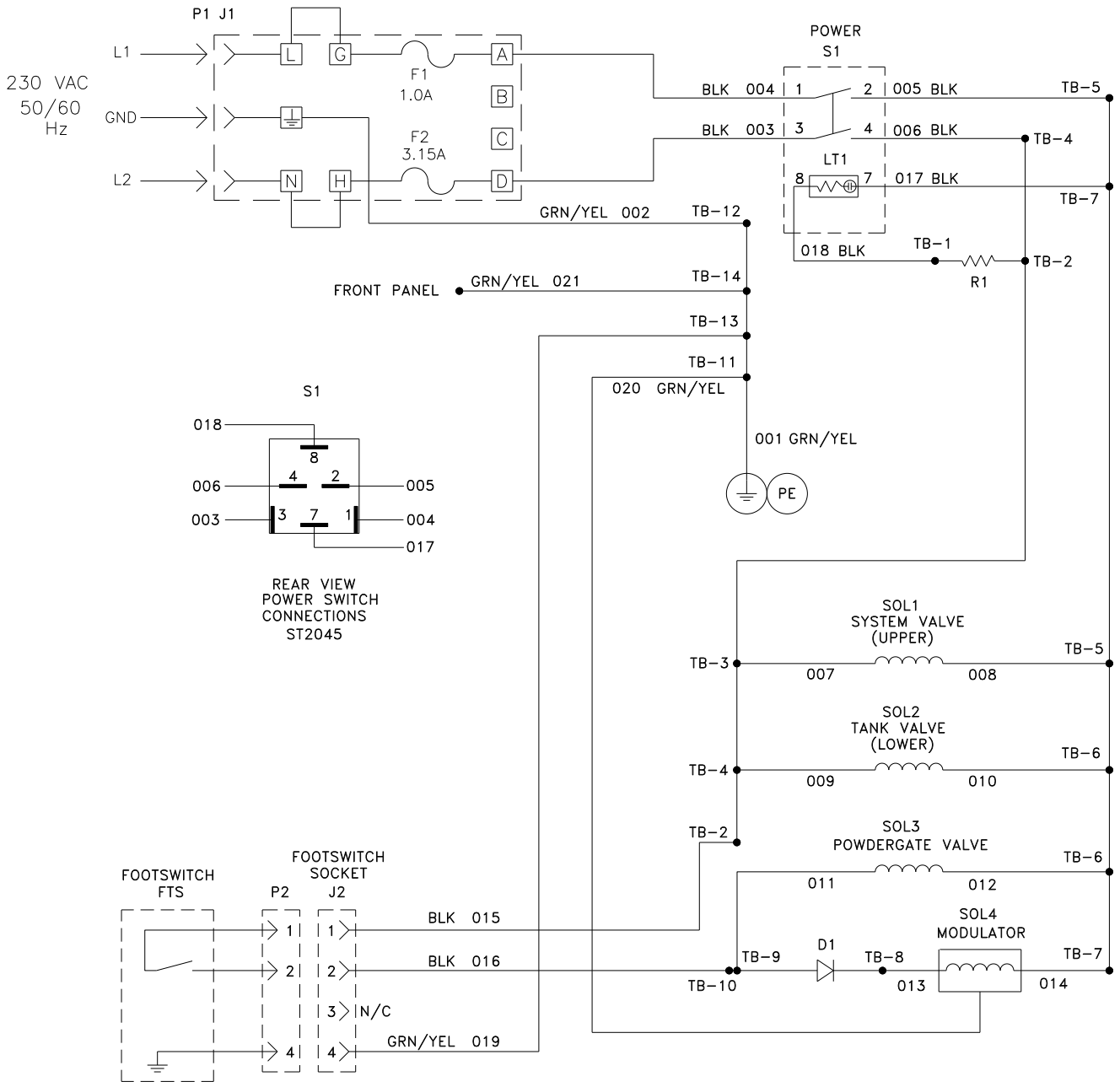

FIGURE 4C: COMPONENT DESIGNATIONS

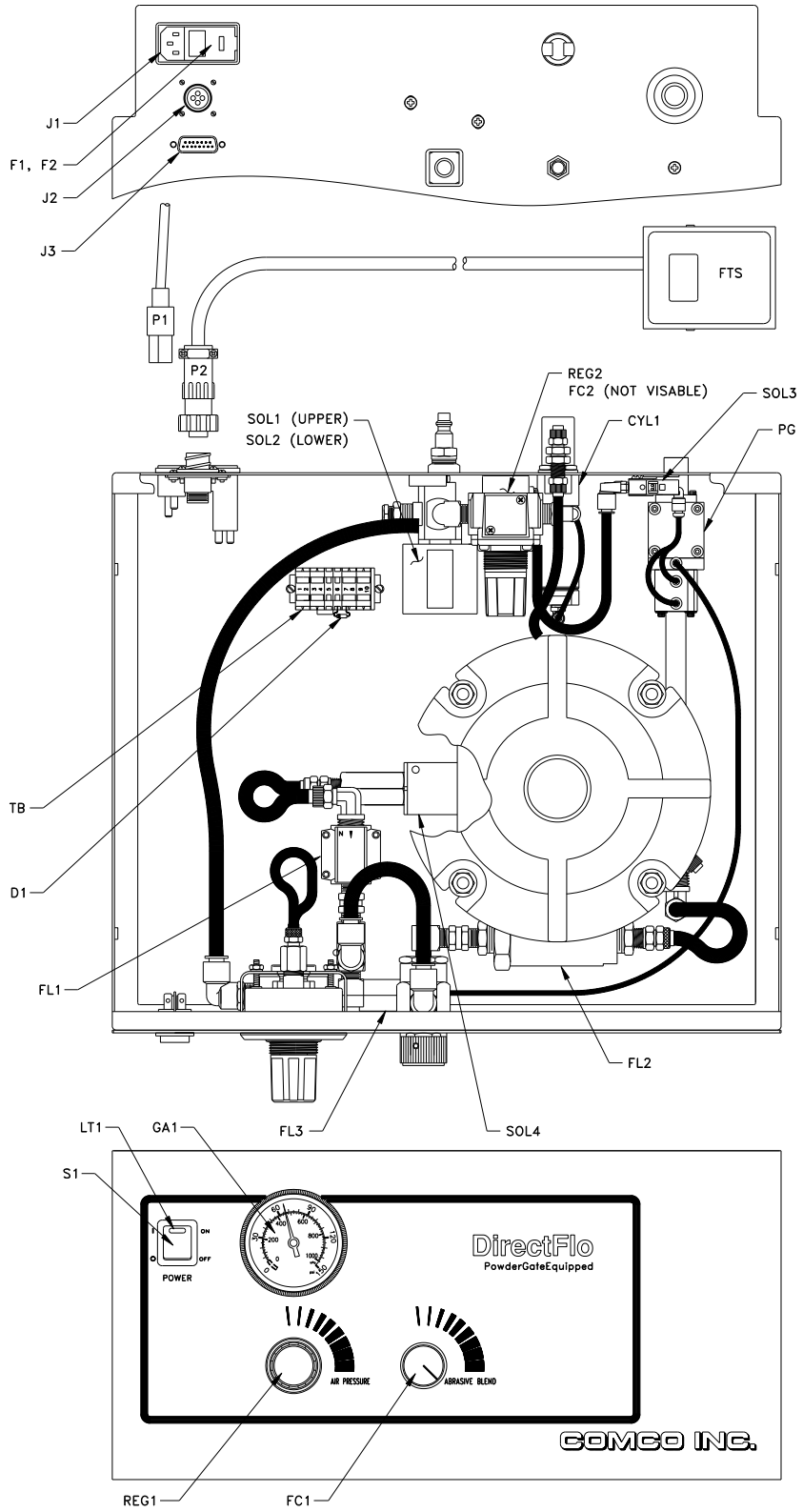

FIGURE 5: P/N PF2480 TANK COVER ASSEMBLY

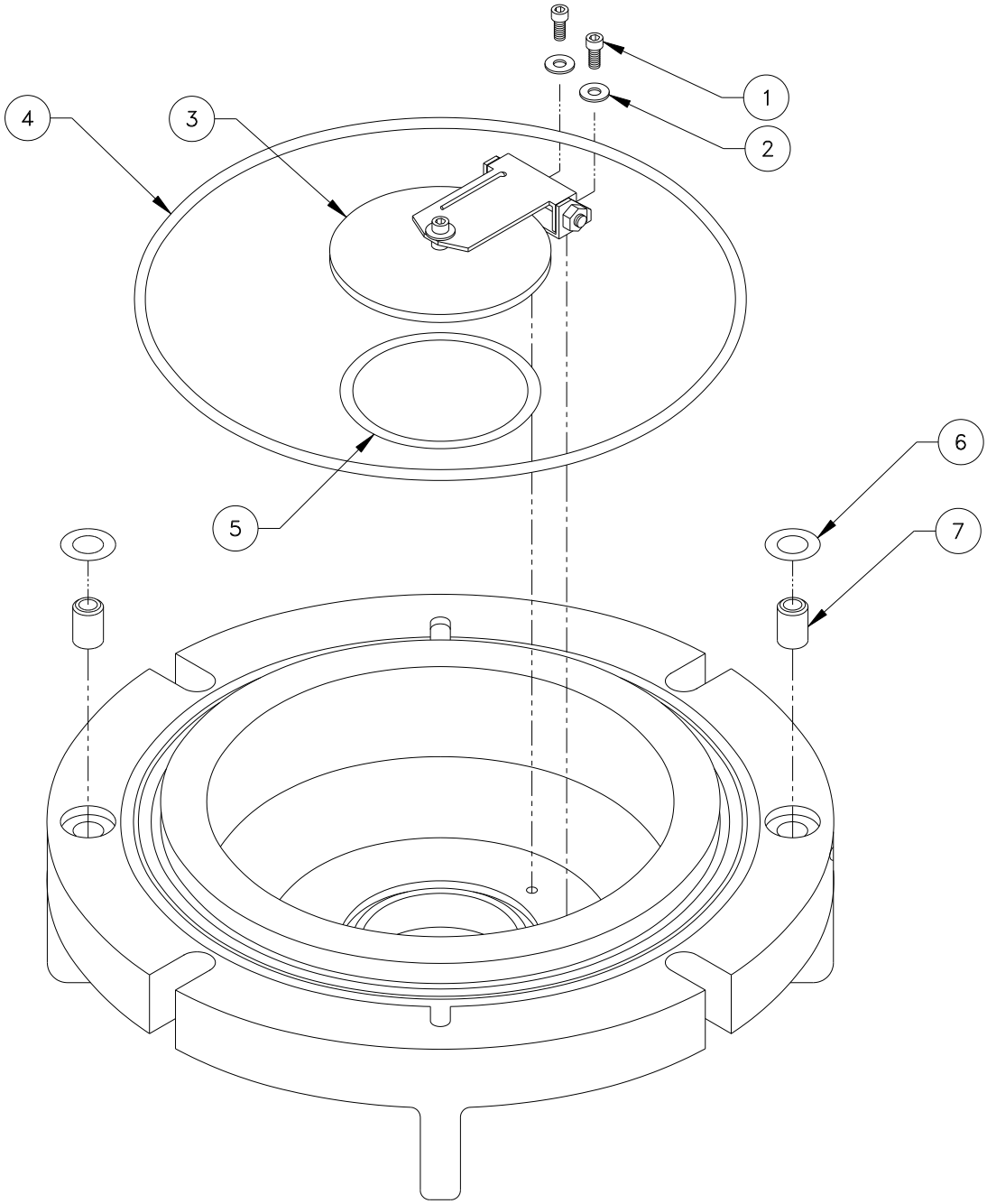

Item No.	Description	Part No.	Item No.	Description	Part No.
1	Scrw, 4-40x.25	ST1030	5	O-ring ø5.859 ID	ST5495 [*]
2	Washer, #4	ST1027	6	O-ring ø.296 ID	ST5496 [*]
3	Flapper Assy.	MB1145	7	Bushing Feedthru	PF2055
4	O-ring ø1.734 ID	ST5023 [*]			

[*] These items are part of PF2139 (O-ring Replacement Kit)

FIGURE 6: ABRASIVE TANK ASSEMBLY

PF1409 Standard Height (17”)
PF1406 Extended Height (25”)

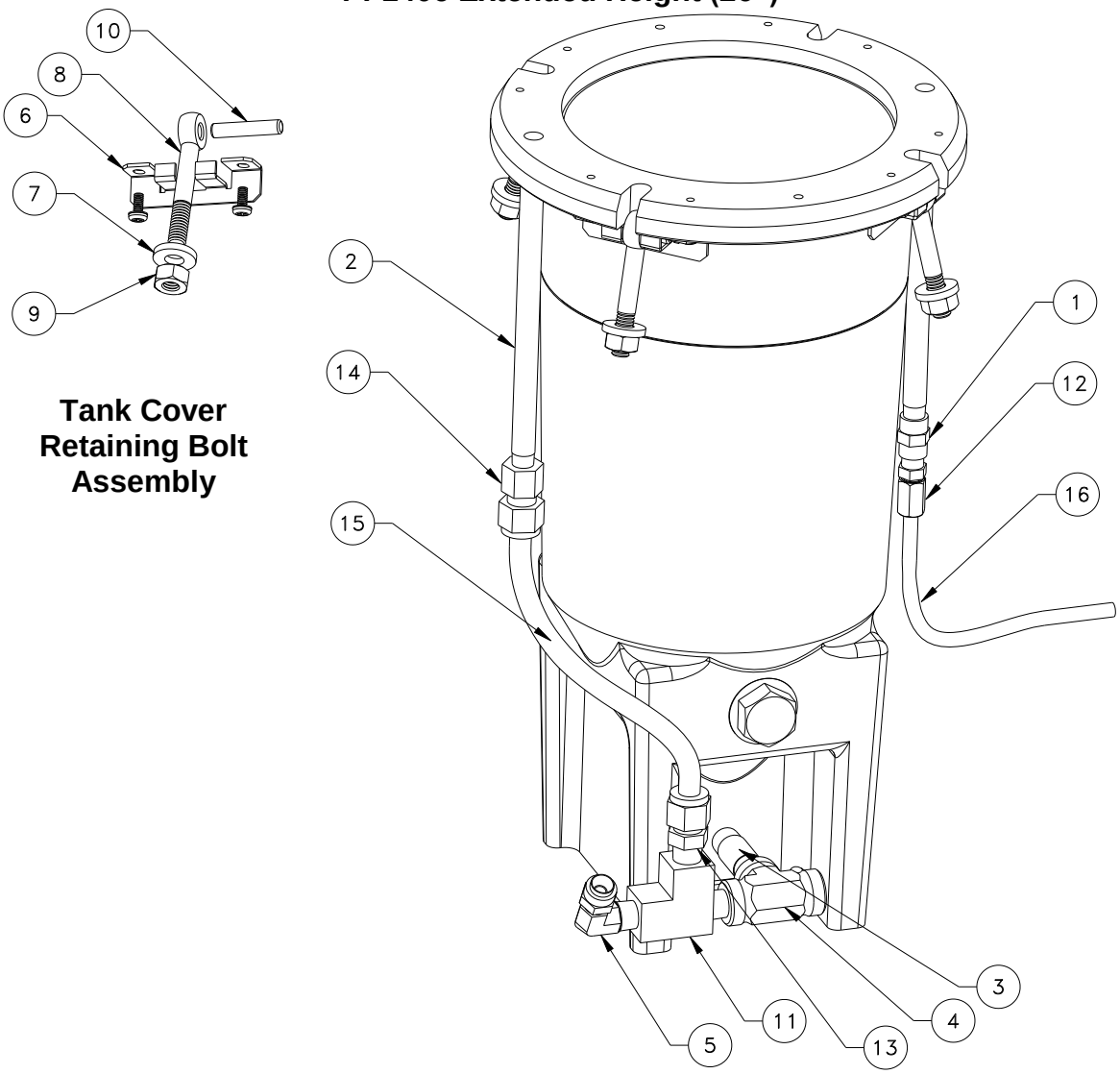

Item No.	Description	Part No.	Item No.	Description	Part No.
1	Coupling, 1/8P, Brs	ST4029	9	Hex Nut, 5/16-18 Brass	ST1289
2	Nipple, 1/8-NPT, 6”Lg	ST4229	10	Pin, Dowel, 1/4 x 1 1/4	ST5163-6
2	Nipple, 1/8-NPT, 12”Lg	ST4236*	11	Tee, Street, 1/4P	ST4138
3	Nipple, 1/4-NPT, 2”Lg	ST4311	12	Conn. W/Qknut 1/8NPT	MB1455
4	Tee, Female, 1/4-NPT	ST4235	13	Conn. Body, 1/4 NPT	ST4184-2
5	Elbow, 3/8T x 1/4P	ST4162	14	Conn., Body, 1/8 FPT	ST4265-2
6	Bracket, Tank Bolt	PF2027	15	Bypass Tube Assy	PF2498-3
7	Washer, Hardened	ST1270	15	Bypass Tube Assy	PF2498-4**
8	Swing Bolt, Tank Cover	PF2079	16	Tubing, 1/4 OD, Blue	MB1233

* 12” Pipe (ST4236) is used on Extended Tanks
** PF2498-4 Bypass Tube Assembly is use on Extended Tanks.

Rev 02/09

FIGURE 7: P/N PF2034 AND PF2034-2 MODULATOR ASSEMBLY

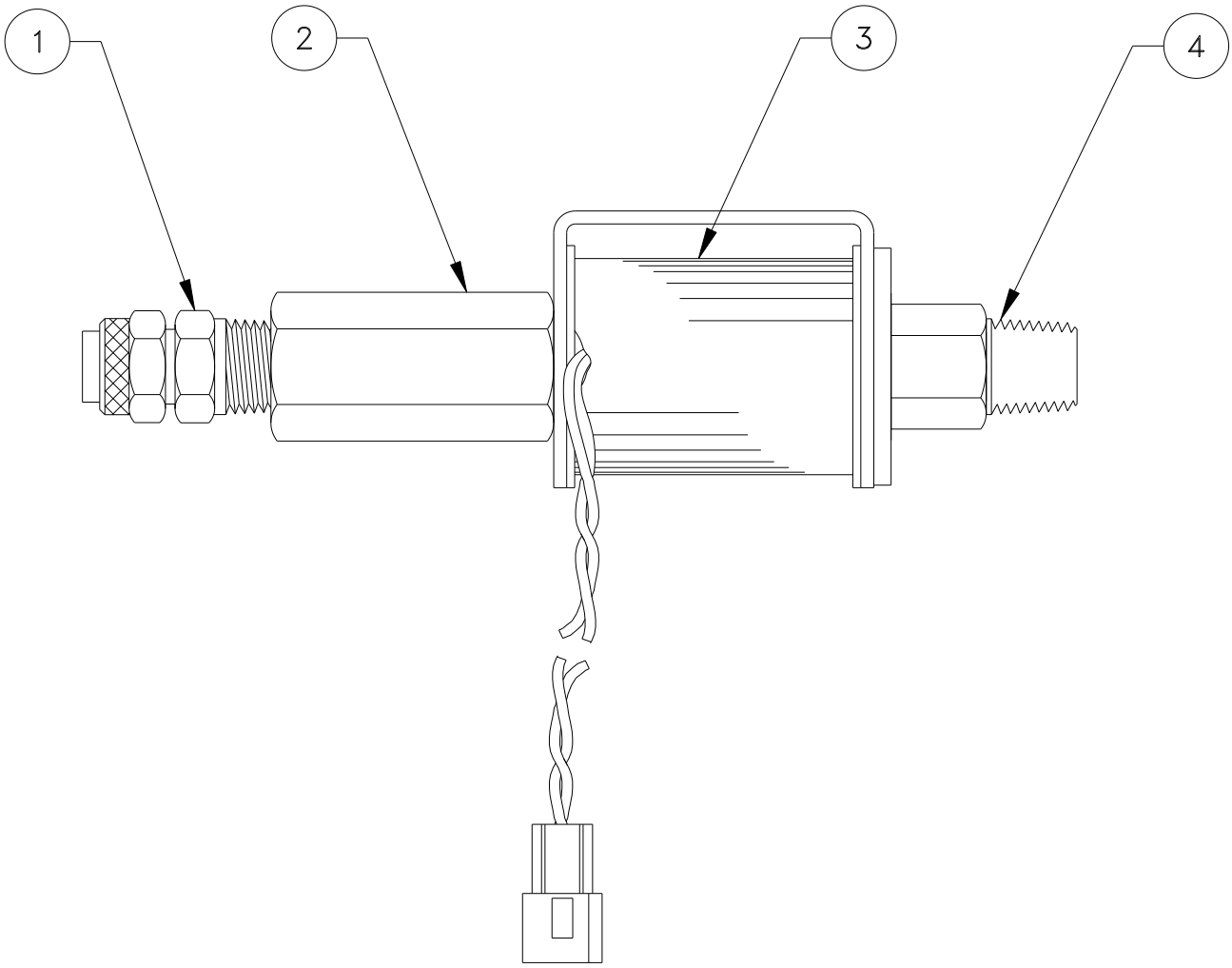

Item No.	Description	Part No.
1	Conn. Male 3/8T x 1/4P	ST4038
2	Coupling Modulator	PF2042
3	Coil, Modulator	MB1310-7 [2]
4	Modulator, Housing **[1]**	PF2040

[1] The Modulator Housing is a Sub-Assembly consisting of three parts typically replaced as one unit.

[2] 230V Coil is MB1310-8

FIGURE 8: P/N PF2406 HANDPIECE & ABRASIVE HOSE ASSEMBLY

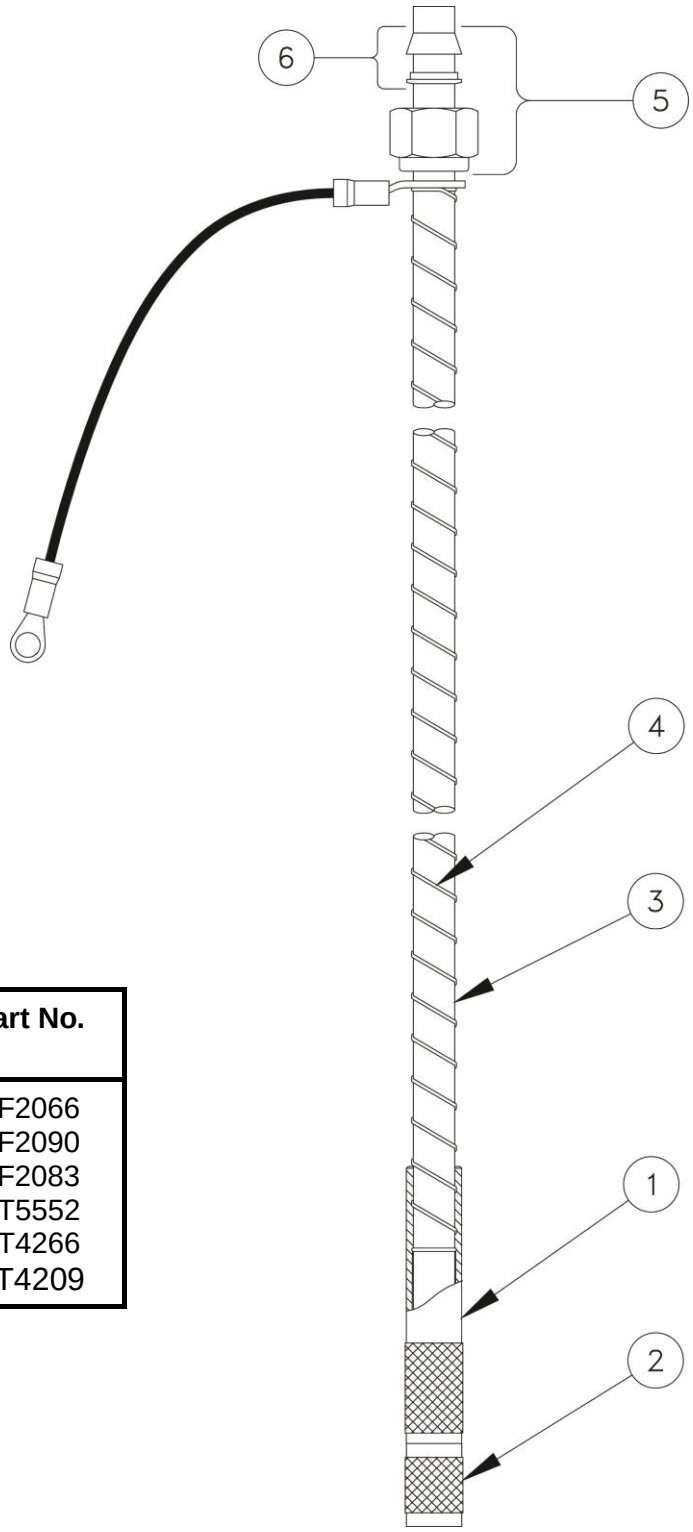

Item No.	Description	Part No.
1	Tube, Handpiece	PF2066
2	Nose, Assy., Nozzle	PF2090
3	Tube, Abrasive	PF2083
4	Spring, Compression	ST5552
5	Nut & Ferrule Set	ST4266
6	Ferrule Set (only)	ST4209

FIGURE 9: P/N PF2445 VENT PINCH ASSEMBLY

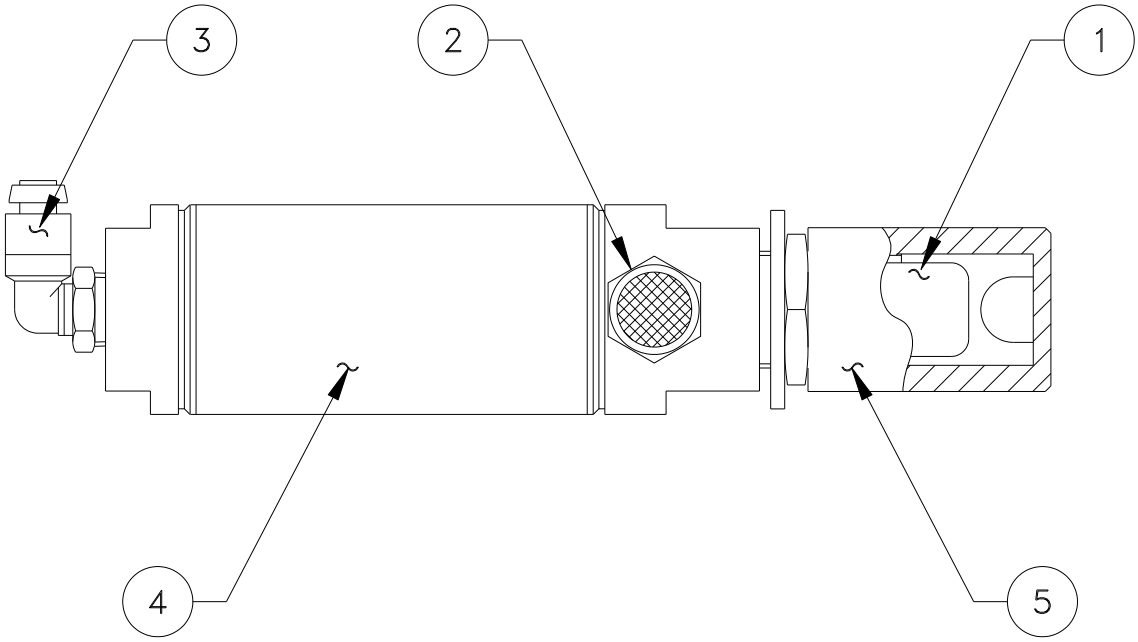

Item No.	Description	Part No.
1	Plunger, Pinch	MB1050-2
2	Vent Breather, 1/8P	ST4003
3	Elbow, Male, 1/8 Thd	ST4224
4	Cylinder, DBL Spring	ST6081
5	Tube, Pinch	MB1282

FIGURE 10: P/N PF2450 POWDERGATE ASSEMBLY

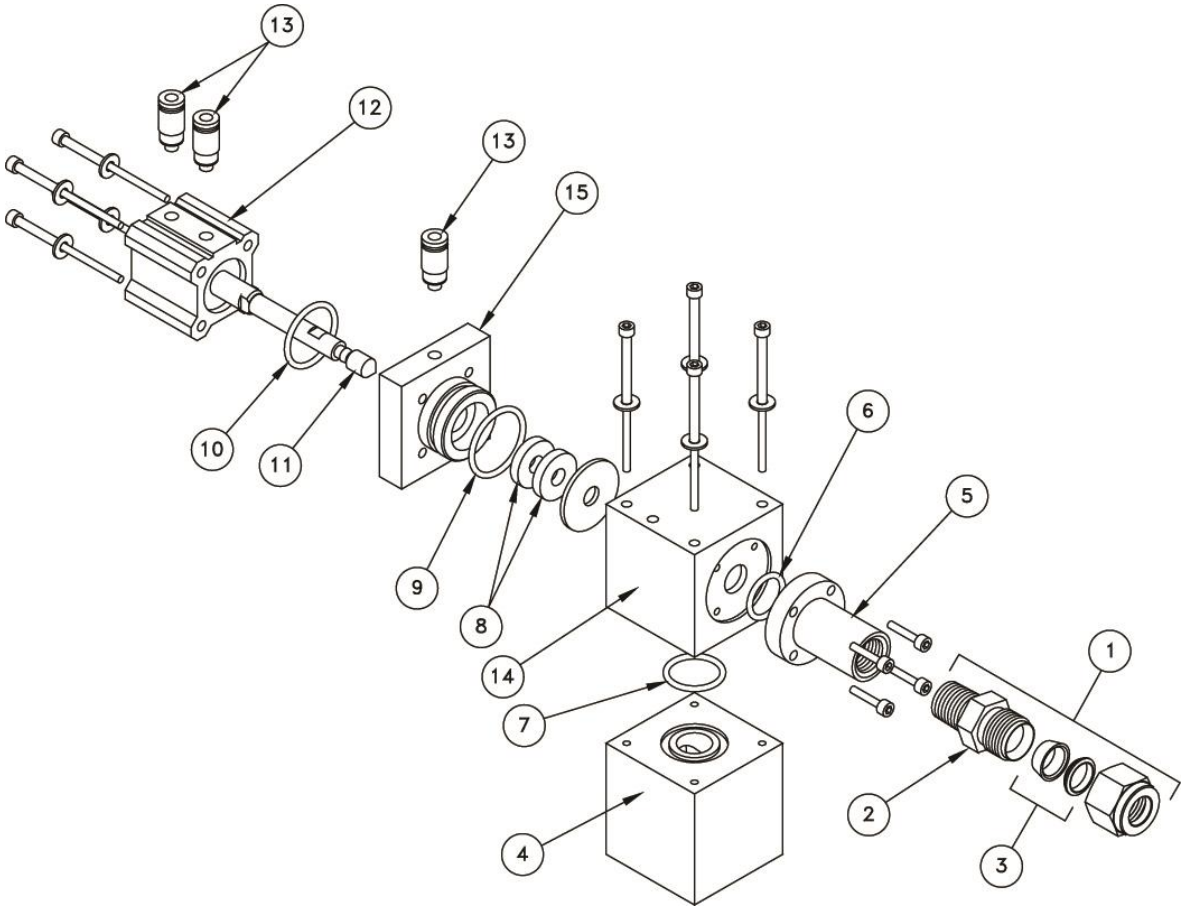

Item No.	Description	Part No.
1	Conn.,3/8T, ¼ NPT, SS	ST4184
2	Conn. Body (Only)	ST4184-2
3	Ferrule Set (Only)	ST4209
4	Connector Block, Rear	PF2193-3
5	Nose/Valve Seat Assy **[1]**	PF2189-2
6	O-ring, 2-014	ST5161
7	O-ring, 2-016	ST5067
8	Wiper, Felt	PF2442
9	O-ring, 2-019	ST5546
10	O-ring, 2-018	ST5031
11	Nosepiece	MB1653
12	Air Cylinder Assy **[2]**	PF2471
13	Fitting, 5/32 OD	ST4172
14	Body, Valve	PF2434
15	Adapter, Cylinder	PF2436

[1] Includes a ST5161 O-ring
[2] Includes a MB1653 Nose Piece

FIGURE 11: P/N PF2443 PRESSURE REGULATOR ASSEMBLY

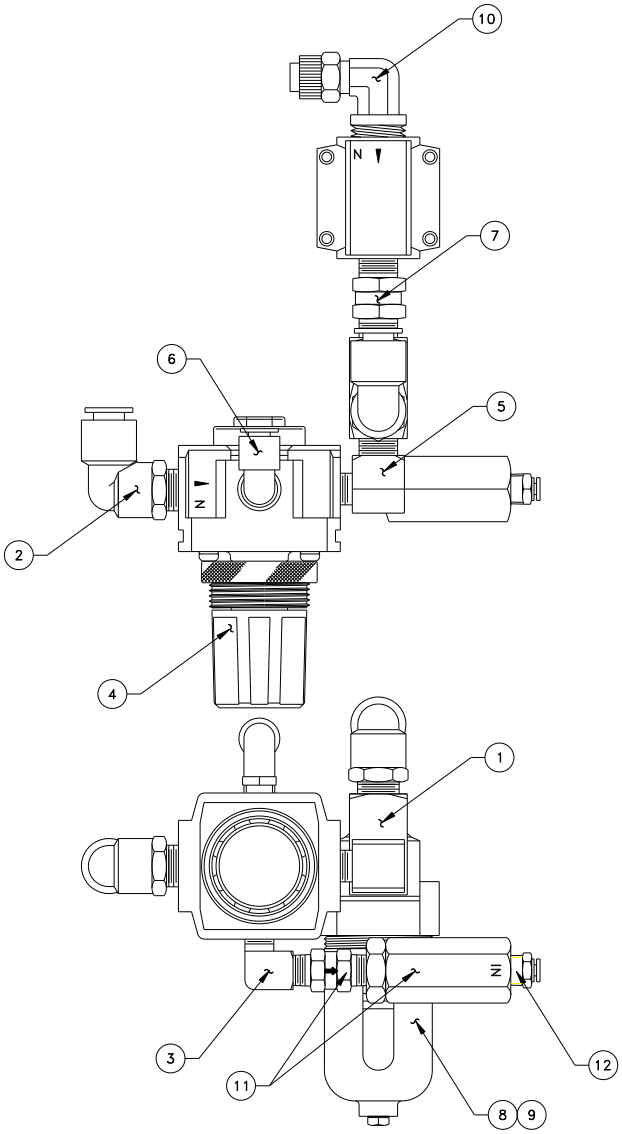

Item No.	Description	Part No.	Item No.	Description	Part No.
1	Tee, Street, 1/4 NPT	ST4138	7	Check Valve,1/4 NPT	ST6209
2	Elbow, 3/8Tx1/4 NPT	ST4142	8	Filter Assembly	PF2210
3	Elbow, Street, 1/8 P	ST4004	9	Replac. Filter Elem.	ST6267
4	Regulator, 3/8 NPT	PF2472	10	Elbow, 3/8Tx1/4 NPT	ST4162
5	Elbow, Street, 1/4 P	ST4143	11	Filter & Check Valve	MB1560
6	Elbow, 1/4Tx1/8 NPT	ST4144	12	Conn. 5/32T x 1/8 P	ST4238

FIGURE 12: P/N PF2142 POWDER ADJUSTMENT ASSEMBLY

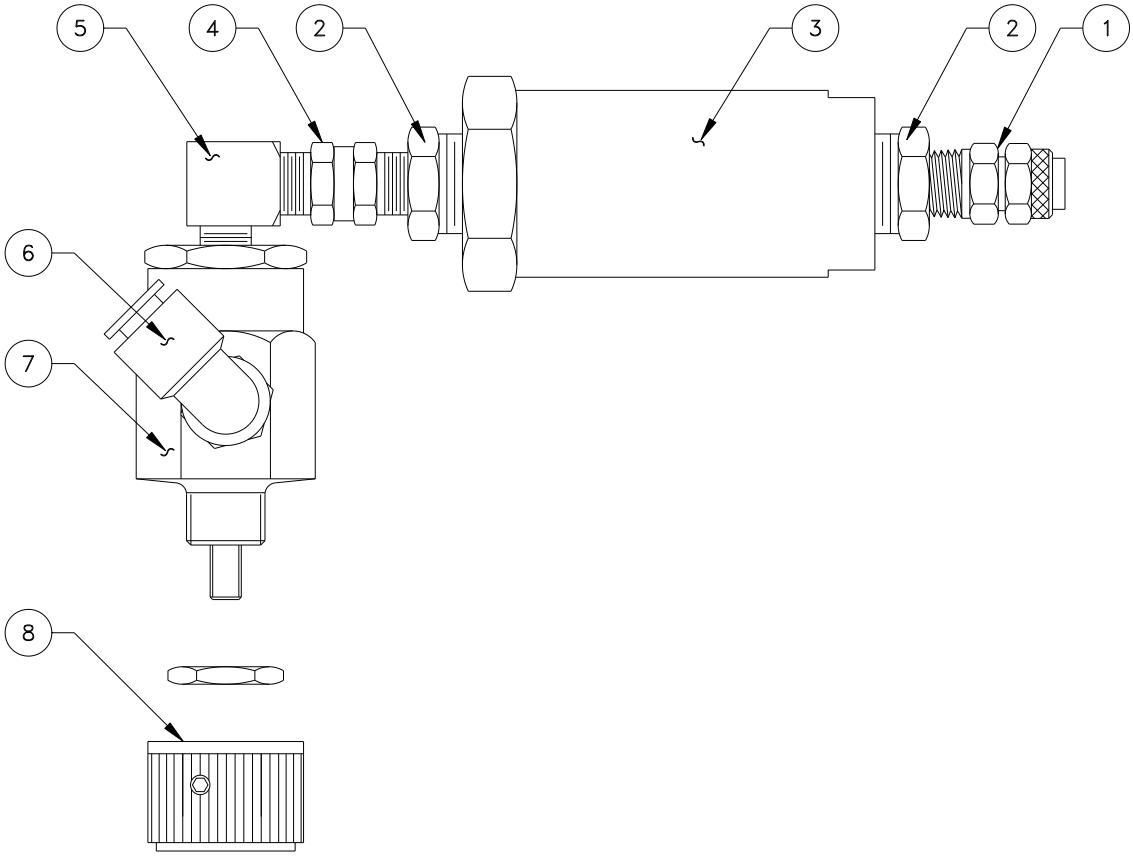

Item No.	Description	Part No.
1	Conn. 3/8T x 1/4P	ST4038
2	Bushing, 1/2 x 1/4P	ST4125
3	Filter In-Line, 1/2” 20M	ST6232
4	Check Valve	ST6209
5	Elbow Street, 1/4P	ST4143
6	Elbow, 3/8T x 1/4P	ST4142
7	Valve Needle, 1/4-P	PF2148
8	Knob, Black **[1]**	ST5520

[1] Not Part of this Assembly

FIGURE 13: P/N PF1404 AND PF1404-2 AIR VALVE ASSEMBLY

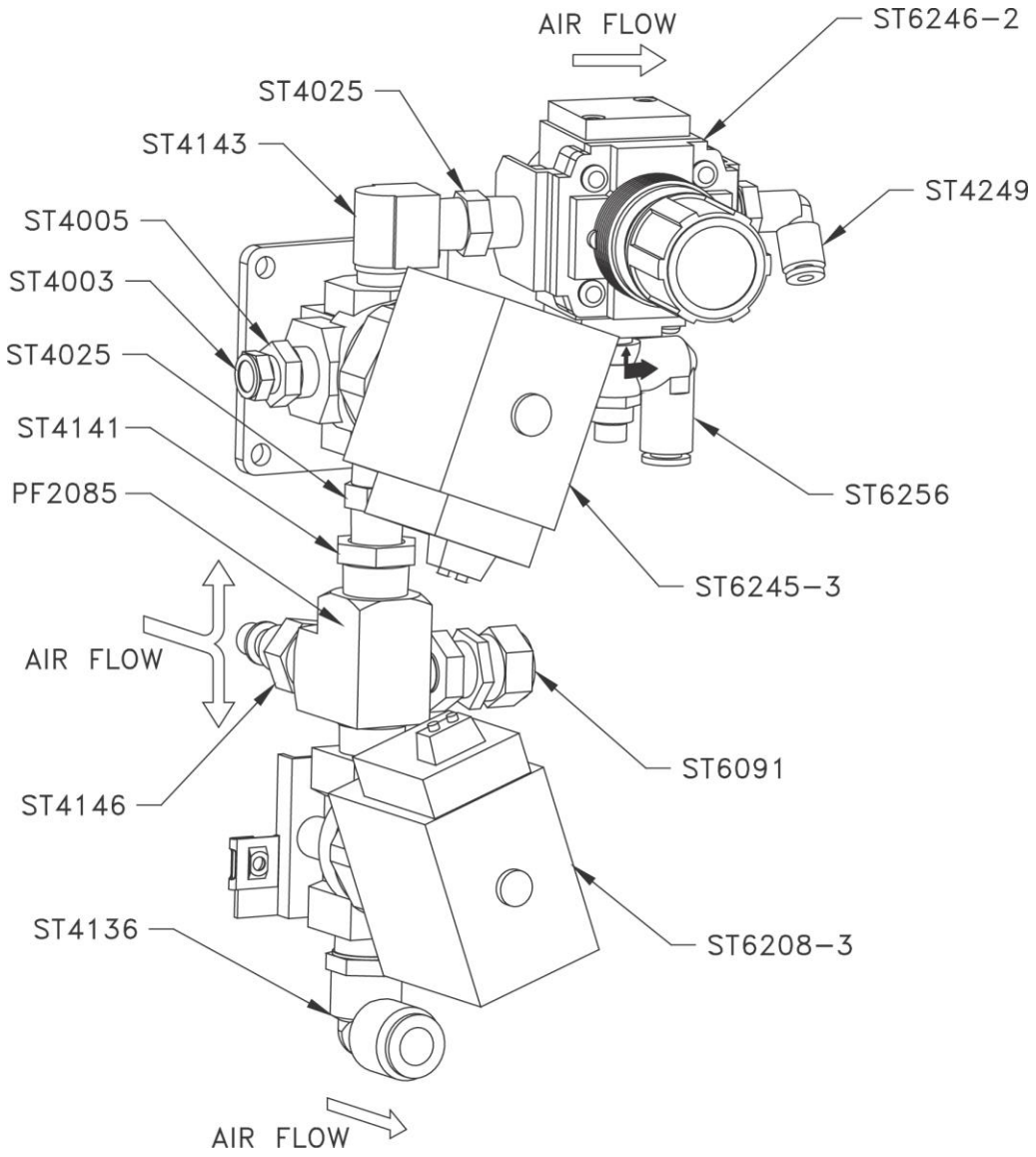

Part No.	Description	Part No.	Description
PF2085	Tee, Street, Modified	ST4146	Plug, Quick-Disconnect
ST4003	Vent, Breather, 1/8 MPT	ST4249	Elbow, 5/32 T X 1/4 NPT
ST4005	Bushing, 1/4 MPT X 1/8 FPT	ST6091	Relief Valve, Adj., 1/8 NPT
ST4025	Nipple, Close Hex, 1/4 NPT	ST6208-3[2]	Valve, Sol, 2-Way, 115V
ST4136	Elbow, 3/8 T X 3/8 NPT	ST6245-3[1]	Valve, Sol, 3-Way, 115V
ST4141	Bushing, 1/4 FPT x 3/8 MPT	ST6256	Valve, Flow Control, Meter In
ST4143	Elbow, Street, 1/8 ¼ NPT	ST6246-2	Regulator 1/4 NPT, w/Backflow Option

[1] 230 VAC Valve, 3-Way is ST6245-3
[2] 230 VAC Valve, 2-Way is ST6208-4

FIGURE 14: P/N PF1407 & PF1407-2 POWDERGATE VALVE

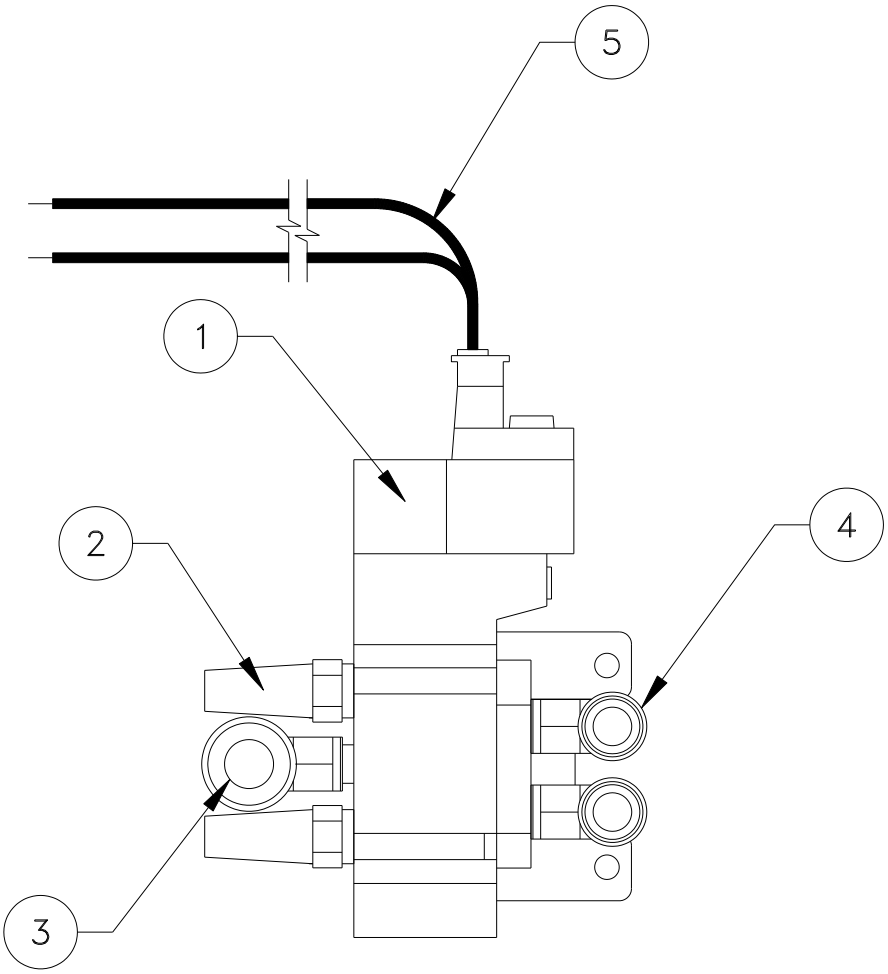

Item No.	Description	Part No.
1	Valve, 4-Way, 110VDC	ST6265 [1]
2	Muffler, 10-32 Thd	ST6263
3	Elbow, 10-32 Thd	ST4198
4	Elbow, Male, 10-32 Thd	ST4222
5	Conn. Valve, 40” Wires	ST6268

[1] 230 VAC Valve, 4-Way is ST6265-2

FIGURE 15: ABRASIVE BASKET ASSEMBLY

Part No.	Length	Description
PF2227-1 PF2227-2	12.375" 20.625"	Abrasive Basket Assy., Standard Abrasive Basket Assy., Extended

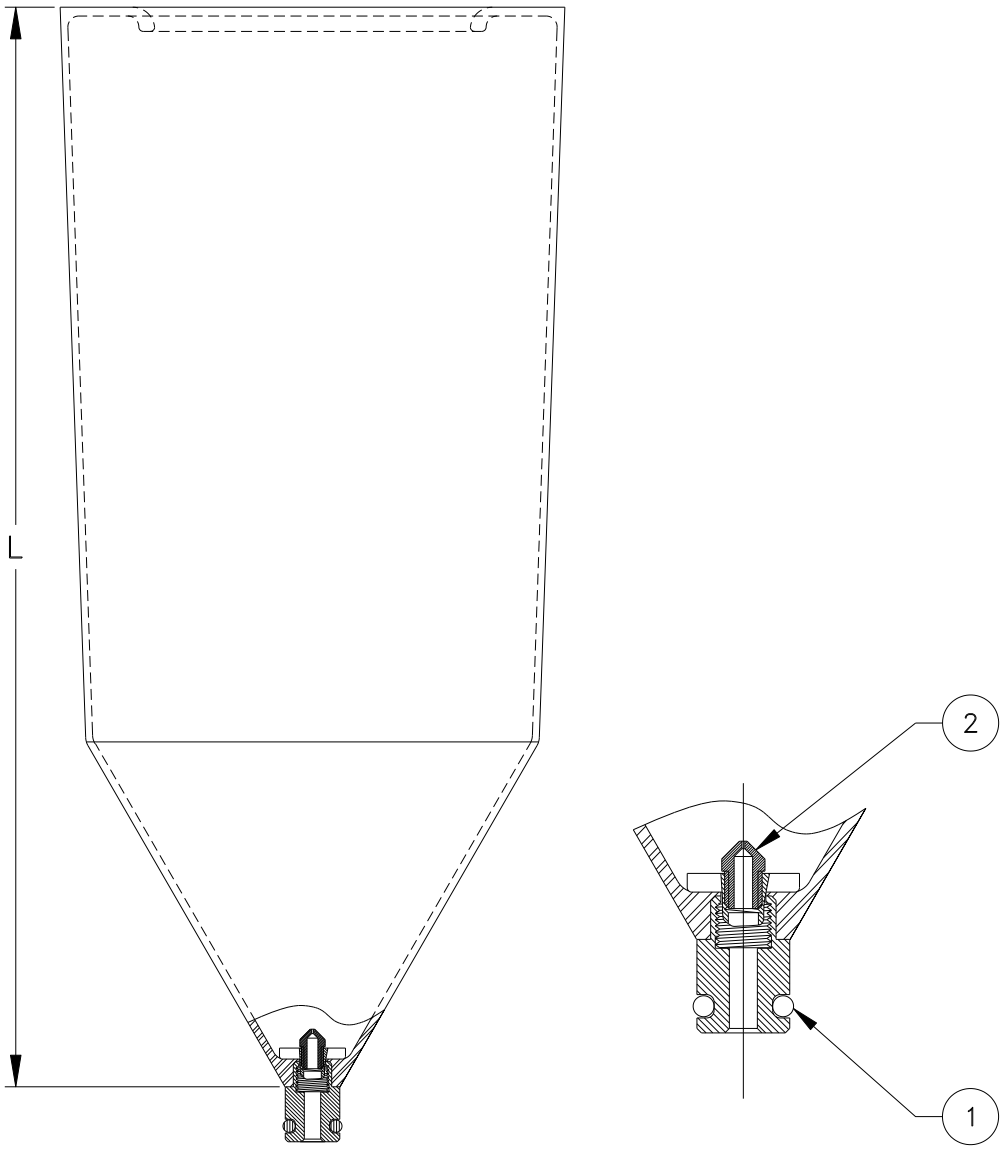

Item No.	Description	Part No.
1 2	O-ring Tank Orifice **[1]**	ST5504 [*] MB1409-25

[1] Tank Orifice size may be changed. Refer to Chapter 3 of the Manual.
[*] This item is part of PF2139 (O-ring Replacement Kit).

THIS PAGE LEFT INTENTIONALLY BLANK